RESOLUTION NO. 45-79

A RESOLUTION AUTHORIZING EXECUTION OF
AGREEMENT RESPECTING CONSTRUCTION, OPERATION AND MAINTENANCE OF
WATER SYSTEM

TIMBERLAKE PINES UNIT 2 IMPROVEMENT DISTRICT
PROJECT 77-1

RESOLVED, by the Board of Directors of the Timberlake Pines Improvement District, Navajo County, Arizona, that

WHEREAS, pursuant to proceedings had and taken under Resolution of Intention No. 77-6, adopted August 30, 1977, this Board has ordered certain improvements, and approved the Engineer's report and confirmed an assessment therefor;

WHEREAS, a form of Agreement Respecting Construction, Operation and Maintenance of Water System by and between this District and Arizona Water Company, has been presented for approval, a copy of which is attached hereto as Exhibit "A".

NOW THEREFORE, IT IS ORDERED that the District enter into the said agreement and the Chairman of this Board execute same and the Clerk attest thereto, on behalf of the District.

* * * * * * *

I hereby certify that the foregoing is a full, true and correct copy of a resolution duly passed and adopted at a regularly held meeting of the Board of Directors of the Timberlake Pines Improvement District, Navajo County, Arizona, on the 21st day of August, 1979, by the following vote:

AYES, and in favor thereof, Directors: 3

NOES, Directors: 0

ABSENT, Directors: 0

Delores Salazar, Acting Clerk
Clerk of the Board of Supervisors
as ex officio Clerk of the Board
of Directors of the Timberlake
Pines Improvement District

(SEAL)

AGREEMENT RESPECTING CONSTRUCTION, OPERATION AND MAINTENANCE OF WATER SYSTEM

THIS AGREEMENT, made this _____ day of _____, 19__, by and between ARIZONA WATER COMPANY, an Arizona corporation (hereinafter referred to as "Company") and TIMBERLAKE PINES UNIT 2 IMPROVEMENT DISTRICT, a body corporate organized and existing pursuant to Article 1, Chapter 5, Title 11, Arizona Revised Statutes (hereinafter referred to as "District"),

W I T N E S S E T H:

WHEREAS, Company is a public service corporation engaged in the business of supplying water, is subject to the jurisdiction of the Arizona Corporation Commission in that regard, holds a certificate of convenience and necessity issued by said Commission in the exercise of such jurisdiction which authorizes the conduct of such business within the territory of District, and is duly franchised by the County of Navajo to exercise its rights and privileges pursuant to that certificate in the public roads and thoroughfares within the District;

WHEREAS, District is a county improvement district formed to provide certain water improvements for the benefit of the properties within its boundaries and proposes to provide a water distribution system (hereinafter referred to as the "water system") pursuant to the provisions of its governing statutes, which water system will provide water, on reasonable demand, to any member of the general public within the territory of District;

WHEREAS, District is not presently engaged in furnishing water, does not propose to so engage, and desires to make provision

for such furnishing upon construction of the water system, and Company is engaged in furnishing water in an area adjacent to the territory within District, proposes to continue to furnish such water and is willing to provide water to the territory within District upon construction of such water system;

WHEREAS, construction of such water system has not yet commenced and is not anticipated to be commenced until arrangements have been completed for the issuance of improvement bonds by the District, the proceeds of which will be used to pay for such construction and provide such system; and

WHEREAS, Company can more economically own, operate and maintain the water system within its certificated territory than can District, and the public necessity and convenience will be served by Company owning, maintaining, operating and providing water service by means of such system to the consumers within its certificated territory, and not by District;

NOW, THEREFORE, THE PARTIES HERETO AGREE, as follows:

1. District shall undertake the construction or acquisition of said water system, as authorized by Article 1.1, Chapter 5, Title 11, Arizona Revised Statutes (hereinafter sometimes referred to as the "County Improvement District Law" or as the "Law"), assessing the costs and expenses thereof upon the properties in such District benefited thereby.

2. The drawings, specifications and addenda for such construction shall be submitted to Company for approval. The specifications shall include the Construction Specifications for Water Mains and applicable Standard Specifications, a copy of which is attached hereto as Exhibit "A". Approval shall not be unreasonably withheld so long as Company's normal construction specifications are followed in every manner. (See attached Exhibit "C".) Approval of any drawings, specifications or addenda by Company shall in no way constitute approval by any other agencies having jurisdiction, such as the Arizona

Department of Health Services, and all applicable requirements of each such agency shall be complied with.

3. After approval of the drawings, specifications and any addenda by Company and any other agencies having jurisdiction, Company shall prepare a cost estimate respecting the materials and labor required for installation of the water system, which estimate shall include an allowance for testing, inspection and other costs in accordance with Company practice. Company may base its cost estimate upon construction bids to it, or on any other method which is in accordance with Company practice. Company shall submit its cost estimate to District on the bid submission date as specified in District's advertisement for bids to general contractors pursuant to paragraph 4, and shall also submit at such time its estimate of amounts that are required to be paid it by paragraph 8, and shall state in its submittal the last day that notice pursuant to paragraph 5 must be received by Company in order that District may have the water system installed in accordance with the cost estimate, which day shall be not less than 90 days from the day of submission of the cost estimate and may be extended by the Company from time to time.

4. District may publish an advertisement for bids for furnishing the materials, labor and supervision required for installation of such water system and may take the other procedures it deems necessary or desirable under the Law. District shall incorporate into the contract documents applicable to any such advertisement for bids the provisions of the General Conditions and Supplemental General Conditions, copies of which are attached hereto as Exhibit "B".

5. In the event District accepts the option of having the water system installed in accordance with the cost estimate of Company, it shall deliver notice thereof to Company in accordance with paragraph 3 and shall reject all bids received pursuant to paragraph 4. In the event District awards a contract pursuant to paragraph 4, it shall deliver to Company a copy of the notice of

award contemporaneously with its delivery of a copy to the awardee. No contract shall be awarded by District pursuant to paragraph 4 to any enterprise not possessing a valid Arizona A-12 pipeline construction license. Upon an award pursuant to paragraph 4, the option of having the water system installed in accordance with the cost estimate of Company shall terminate.

6. In the event District awards a contract pursuant to paragraph 4, a copy of the agreement, the accepted bid, the performance and payment bonds and the insurance certificates shall be furnished Company, a copy of the notice to proceed shall be delivered to Company contemporaneously with delivery of a copy to the contractor, and a statement of the actual cost paid to one or more construction contractors by the District shall be submitted to Company by District, within 120 days after completion of construction.

7. In the event District accepts the option pursuant to paragraph 3 of having the water system installed in accordance with the cost estimate of Company, District shall advance to Company, or into an escrow or similar arrangement for the benefit of Company which provides for investment for and payment (including investment earnings) to Company upon certification of completion of construction by Company, the full amount of the cost estimate within 60 days of such acceptance, as an advance in aid of construction of the items in the cost estimate. Upon receipt or escrow of such advance, Company shall estimate the day of completion, shall notify District of such day and shall proceed with due diligence to completion.

8. In the event District contracts for construction pursuant to paragraph 4, District shall pay Company a reasonable amount for inspection, testing and other costs of the Company on an as-rendered-and-billed basis.

9. (a) Changes in the drawings, specifications and addenda may be made from time to time by approval of Company and District, provided additional approval by the Arizona Department of Health

Services is not required. Neither party shall unreasonably fail to approve changes requested by the other. All changes shall be in writing and signed by Company and District, shall state the effect of the change on the time provided for construction and shall itemize the effect on either the construction contract amount or the cost estimate, as the case may be. In the case of changes ("Field Orders") which neither involve an adjustment in the construction contract amount or the cost estimate, as the case may be, or an extension of the time for construction, approval by the District's Engineer and the Company's Project Representative shall constitute approval of District and Company, respectively. In the case of changes ("Change Orders") which involve an adjustment in the construction contract amount or the cost estimate, as the case may be, or an extension of the time for construction, approval by the Superintendent of Streets of Navajo County with the consent of the Board of Directors of the District and approval by the Company's President or Executive Vice President shall be additional requirements necessary to constitute approval of District and Company respectively.

(b) In the event District has accepted the option of paragraph 3, if the change increases the total sum, District shall advance such increase to (or escrow for) Company, and if the change decreases the total sum, Company shall pay such decrease to (or reduce the escrow for) District, at the time of execution of the change order. Within 120 days after completion of construction, Company shall submit to District a statement of actual construction cost itemized in the same manner as the cost estimate. If the actual construction cost is greater than the advance (or into escrow) to such date, District shall pay such difference to Company, and if less, Company shall pay such difference to (or reduce the escrow for) District, within 30 days of submission, and the cost estimate shall be deemed adjusted accordingly.

10. District's Engineer shall provide the construction surveying and staking required by his contract with District and such inspection and testing as in the judgment of said Engineer approved by the Superintendent of Streets is necessary, considering the inspection and testing undertaken by Company, and said Engineer and the Superintendent of Streets shall have access to the work at all times for inspection and testing purposes. Company shall inspect and supervise all tests, and Company's Project Representative shall coordinate such inspection and testing with any inspection and testing by the District's Engineer. All pipelines, valves, fittings, meters, tanks or any other facilities constituting a portion of the water system shall, upon completion of the water system, become the property of District, and upon becoming the property of District, immediately shall become the sole property of Company, and District shall have no further right, title or interest in such facilities. District shall issue a written Bill of Sale to Company for property transferred to Company.

11. Upon undertaking any part of the construction by employment of an independent contractor for same, Company or District, as appropriate, shall cause to be provided a surety bond for performance and a surety bond for labor and materials, each in the amount of 100% of the contract price, and personal injury and property damage insurance in the amount of $500,000 and $200,000, respectively, both single and aggregate liability. In all other circumstances, Company shall indemnify, defend and hold District harmless from any and all claims asserted and liabilities adjudged for which a contractor to the District, were the system being constructed under that option, would be required to purchase and maintain insurance by the provisions of the General Conditions and Supplemental General Conditions, copies of which are attached as Exhibit "B".

12. Upon completion, Company shall furnish District with a certificate of same, executed by Company's Project Representative and President or Executive Vice President, and District shall furnish

Company with a certificate of same executed by District's Engineer and Superintendent of Streets. On the basis of such certificate or certificates, District shall underake acceptance proceedings pursuant to Section 11-761.01.D of the Law.

13. Upon completion, the water system shall be owned by Company, subject to its public service obligation to provide water service, on reasonable demand, to the general public within its contiguous certificated territory and the provisions of the Arizona Corporation Commission's "Rules and Regulations Relating to the Operation of Domestic Water Utility Companies".

14. Company shall refund to District twenty percent (20%) of total annual gross revenue from water sales to each bona fide customer serviced by said water system in each subdivision, tract, development or project, or located on a single parcel or lot within Company's certificated territory, for a period of fifteen (15) years from the date of completion, provided, however, that in the event at the end of said fifteen (15) year period, refunds equal to the Refundable Amount shall not have become payable hereunder, then in such event, the balance of the Refundable Amount shall no longer be refundable in accordance with Arizona Corporation Commission General Order No. R14-2-115 (formerly U-41).

15. Refunds shall be made by Company on or before the 31st day of August of each calendar year, covering any refunds owing from water revenues received during the preceding July 1st to June 30th period. Aggregate refunds shall in no event exceed the total of the Refundable Amount, and no interest will be paid by Company on said Refundable Amount or the refunds to be timely made. Company shall supply District with an estimate of the refund to be made, at least ten (10) days prior to the date that the Board of Directors of District establishes as the date for its statement and estimate required by Section 11-752, A.R.S., in the manner provided by Section 42-302, A.R.S.

16. Company shall make no refunds from any revenue received from any lines, other than the customer service lines, leading up to or taking off from the particular mains or line extensions constituting the portions of the water system conveyed pursuant hereto, whether the same may have been previously installed or may be installed in the future.

17. Company may, upon approval by the Arizona Corporation Commission, terminate its obligation to refund a percentage of gross revenues from the line extension as described above by accord and satisfaction of its obligation under this Agreement.

18. The term "Refundable Amount" shall be the lesser of (1) the actual cost paid to one or more construction contractors by the District in the event District awards a contract pursuant to paragraph 4 and the cost of Company's charges for inspection, testing, and other costs paid pursuant to paragraph 8 or (2) the cost estimate of Company, adjusted pursuant to paragraph 9 if the District accepted the option of paragraph 3, otherwise, unadjusted.

19. District shall obtain and convey to Company all necessary easements, free of encumbrances, which are not dedicated as public utility easements, within which any portion of the water system shall be constructed, except for portions constructed in public streets and roads.

20. District states that it shall not keep its books and records in conformity with the Uniform System of Accounts for Water Utilities prescribed by the National Association of Regulatory Utility Commissioners.

21. Before this Agreement shall become effective and binding upon either Company or District, it shall be filed with and approved by the Utilities Division of the Arizona Corporation Commission and rates for the furnishing or sale of water from the water system shall be approved by such Commission, and in the event such approval shall not be forthcoming, this Agreement shall be null and void and of no force or effect whatever.

22. Notice shall be deemed to have been delivered and received hereunder when such notice shall have been mailed or delivered to Company at Arizona Water Company, 2612 North Sixteenth Street, Post Office Box 5396, Phoenix, Arizona 85010, or to District at the office of the Superintendent of Streets of Navajo County at the Department of Public Works, Governmental Complex, Holbrook, Arizona 86025, as the case may be.

23. This Agreement shall be binding upon and inure to the benefit of the parties hereto and their respective legal representatives, successors and assigns, provided, however, that no assignment or other transfer of this agreement shall be binding upon or create any rights in the assignee until such assignment or other transfer is approved and accepted by the other party hereto.

24. The terms and provisions of this Agreement may not be modified or amended except in writing. This Agreement may be executed simultaneously in two or more counterparts, each of which shall be deemed an original, but all of which together shall constitute one and the same instrument. Failure to exercise any of the rights granted hereunder for any one default shall not be a waiver of the right to exercise any of these rights for any subsequent default as the rights granted hereunder are continuous. In the event that it becomes necessary for any party hereto to employ counsel to enforce any of the provisions of this Agreement or the breach thereof, then in that event, the losing party agrees to pay all costs and expenses and the reasonable attorney's fees therefor, the amount to be fixed by the court without a jury. Time is of the essence in the performance of each and every obligation herein imposed. This Agreement shall be deemed to include the entire agreement between the parties hereto and no waiver of any right, agreement or condition hereof shall be binding upon any of the parties hereto unless in writing and signed by the party to be charged herewith.

IN WITNESS WHEREOF, the parties have hereunto caused these presents to be executed as of the date first written above.

TIMBERLAKE PINES UNIT 2 IMPROVEMENT DISTRICT, an Arizona county improvement district, "District"

By Norman W. Gurley
Chairman

ATTEST:

Delores Salazar, Acting Clerk
Clerk

ARIZONA WATER COMPANY,
an Arizona corporation,"Company"

By R. E. Polanche
Its EXECUTIVE VICE PRESIDENT AND GENERAL MANAGER

ATTEST:

Betty E. Crane
Secretary

EXHIBIT "A"

CONSTRUCTION SPECIFICATIONS
FOR
WATER MAINS

A. General

All water mains shall be laid and the work incidental thereto performed in accordance with the provisions of A.W.W.A. Standards C-600 and C-603.

Where not noted on the plans, water mains shall have a minimum cover of 36 inches over the top of the barrel. No water main shall be deflected, either vertical or horizontal, in excess of that recommened by the manufacturer or the pipe or couplings, without the appropriate use of bends or offsets. Extra depth may be required to pass under existing utility lines.

All dead ends on new mains shall be provided with a blow-off cock in the plug or cap, and reaction backing be so arranged that it is not encased or covered by the concrete.

After installation, all pipe lines shall be left thoroughly clean. They shall be tested in accordance with A.W.W.A. C-600 at 200 psi or 1½ times the working pressure, whichever is greater. A determination of quantities of leakage shall be made after the pressure test and no pipe line installation will be accepted unless leakage is less than the allowable, zero leakage over a two hour period.

After testing of lines the trenches shall be backfilled and compacted. All backfilling around the pipe and to 6 inches over the pipe shall be compacted to 95% percent of maximum density. All backfilling in trenches crossing the streets or driving sections of the roads shall be compacted to ground surface to 95% percent of maximum density. All other trenches shall be compacted in the conventional manner.

After pressure testing and before placing in service, all water lines shall disinfected in accordance with Arizona State Dept. of Helath Engineering Bulletin No. 8. All valves in the lines being disinfected shall be opened and closed several times during the period of disinfection. Following chlorination and disinfection of the lines, all treated water shall be thoroughly flushed from the pipe lines at their extremities. If necessary the chlorine residual tests will be repeated at the Contractors expense if the residual test (10 mg/l after a contact time of 24 hours) is not met. Separate payment shall not be made for any of the work required for disinfection of the pipes but shall be included in the unit price bid for the pipe, in place.

All Water-Sewer line crossings shall comply with Environmental Health Services Arizona State Department of Health Engineering Bulletin No. 10, Part 14, section G.

B. WATER MAINS

1. Asbestos Cement Pipe

All Asbestos Cement Pipe and couplings shall be new, American made and shall conform to the requirements of A.W.W.A. Specification C-400, class 150. The manufacturer shall furnish a sworn statement that the requirements

of these specifications have been met. Couplings and rubber rings shall be as furnished or recommended by the manufacturer of the pipe.

EXCAVATION AND BACKFILL: The trench shall be excavated to a minimum width of 6 inches on each side of the pipe being installed to allow for curvature of the pipe where required. Minimum radius of curvature shall be 1,000 ft. for 6 inch pipe, 700 ft. for 4 inch pipe and 100 ft. for 2 inch pipe and smaller. Trenches shall be excavated to allow for a minimum cover of 36 inches over the pipe/ The bottom of the trench shall be graded to a smooth flow line and if rock is encountered the trench shall be excavated to a depth of 6 inches below grade and backfilled with a select material of 1/4 inch max. size. After the pipe is installed the same type select material shall be used to fill a minimum of 1.0 ft. over the tip of the pipe and compacted to 90% Max. density.

CUTTING AND BEVELING: The pipe shall not be cut with a pipe cutting wheel but shall be cut with a tube cutter or a fine tooth carpenters saw, or a hacksaw. A pivot type beveling tool shall be used and bevels shall match the factory finished bevel.

SERVICE CONNECTIONS: Service Connections shall be made through the use of a direct tap. A shell type cutter shall be used. Auger type drilling shall not be used (except on AC Pipe).

THRUST BACKING: Thrust Backing shall be used at every angle or direction change in the pipe and shall be concrete. The area shall be adequate for the size of pipe and type of material in accordance with the manufacturers recommendations.

FITTINGS AND COUPLINGS: Fittings and Couplings shall be cast iron fittings of a standard manufactured item of the supplier.

CLEANUP: Following backfill of the trench section (service trenches included), the work area shall be cleaned. Equipment, excess materials, rubbish and spoil shall be removed. Asphalt and concrete surfaces shall be restored as described elsewhere in these specifications. Gravel streets and alleys shall be restored to their former bearing capacity and graded within the work area. Where required in the Special Provisions, fences, turf and other improvements disturbed in the course of the work shall be replaced. Encroachments removed in the course of the work shall be neatly placed on the abutting property or disposed of as directed. The natural ground surface shall be dressed and left in a presentable condition.

2. Measurement and Payment

All water mains will be measured horizontally, complete in place by the linear foot along the central axis to the nearest whole foot from the center of fitting to center of fitting, or to the terminus of the line constructed. Payment will be made for the linear feet of pipe of each size constructed in place, at the unit prices bid for the respective sizes, and will be full compensation for furnishing and placing the pipe, including all labor, tools, equipment, excavation, backfill and incidentals necessary to complete the work. All necessary fittings shall be included in the costs and bid prices for the pipe.

C. VALVES AND VALVE BOXES

1. Valves

All valves shall be vertically mounted double disc gate/type with non-rising stems, "O" ring seals, and belled ends, conforming to A.W.W.A. Mueller specification C-500-61 and shall open by turning counterclockwise. In addition, valves shall be constructed so that the bonnet and stem may be removed while the valve is closed and under the specified working pressure on either or both sides, without undue leakage past either disc. The manufacturer shall furnish a sworn statement that the requirements of these specifications have been met.

Just before installation in the line, each valve shall be opened and closed to check the action, and the inside of the valve shall be thoroughly cleaned.

2. Tapping Sleeve and Valve Assembly

Tapping sleeves and considered an integral part of a tapping sleeve and valve assembly, with openings the same size as the valve. Tapping valves shall conform to the above specifications for valves and shall vave ends and seat rings of sufficient size and proper construction to permit the use of full size cutters of either the Mueller or Smith type tapping machines.

The tapping valve shall have the discs and seat rings so constructed that the inside diameter of the rings shall be at least 3/10" larger than the nominal size of the valve. The seat rings shall have a minimum seating surface area equal to that of a standard gate valve, and the discs shall be proportionately larger to match.

3. Valve Boxes

Valve boxes shall be cast iron sliding adjustable Buffalo type with a minimum shaft diameter of 5 inches. Cast iron covers shall be marked "WATER". They shall be set to finish street grade over all buried valves, and shall be supported at their lower end by bricks with at least 2 inches clearence from the valve bonnet.

4. Measurement and Payment

Each valve with valve box and cover will be counted as a unit complete in place. They shall be paid for at the unit price bid for the respective sizes. Payment will be full compensation for all labor, tools, equipment, excavation, backfill and incidentals necessary to com-

plete the installation.

D. FIRE HYDRANTS COMPLETE INCLUDING VALVES AND TEES

Fire Hydrants shall conform to A.W.W.A. Specification C-502, as manufactured by the Mueller Company, or an approved equal, except that the Hydrant main valve opening shall be 5 inches. Bury shall be a minimum of 36 inches and shall be painted RED above the ground. Nozzles shall be 2-2½" hose with N.S. (A.S.A.B26) threads and 1-4½" pumper with N.S.(A.S.A.B26) thread. Nozzle caps shall be water tight. Hydrants shall open counterclockwise and shall be equipped with a breakable section to facilitate repair of traffic damage.

All pipe and fittings from the main to the fire hydrant shall be standard mechanical joint and an auxiliary gate valve shall be included. Drain hole plugs shall be removed before installation. All hydrants shall be flushed and left in good working condition with the auxiliary valve in the open position.

All cast iron pipe and fittings shall be new, class 150 or stronger when required by the Engineer, Conforming to A.W.W.A. Specification C-106 or C-108, and cement mortar lined in accordance with A.W.W.A. Specification C-104.

E. Valve Wrenches

Upon completion of the project the Contractor shall furnish to the Owner two sets of wrenches for each size and type of valve for the operation of the system. These shall be provided at the Contractors expense.

1. Measurement and Payment

Each fire hydrant, together with an Auxiliary Gate Valve, a main line tee, mechanical joint cast iron pipe and other fittings if needed, a drainage pit, and anchorage, all installed as shown on the standard drawing, will be counted as one unit. All fire hydrants will be paid for at the unit price bid, which will be full compensation for all labor, tools, equipment, excavation, backfill and incidentals (including valve wrenches) necessary to complete the work.

F. FITTINGS AND REACTION BACKING

1. Fittings

All fittings shall be new, of cast iron, shall conform to the requirements of A.W.W.A. Specification C-110-52 and shall be cement mortar lined in accordance with A.W.W.A. Specification C-104-54. The manufacturer shall furnish a sworn statement that the requirements of these specifications have been met.

2. Reaction Backing

Reaction backing shall be concrete of a mix not leaner than 1 cement: 2½ sand: 5 stone, and having a compressive strength of not less than 2,000 psi at 28 days. Backing shall be placed between undisturbed ground and the fitting to be anchored; the area of bearing on the ground shall be as specified in the following table.

The backing shall be so placed that the pipe and fitting joints will be accessible for repair. Each block shall contain at least 2 cubic fee of concrete, and no dimension of the block shall be less than 12".

MINIMUM BEARING AREA, SQ. FT., OF REACTION BACKING

	End	Tee	90	45	22½	11¼	Valve
4" & 6"	3	3	4	2	1	1	1
8"	5	5	7	4	2	1	2

3. Measurement and Payment

All fittings in the water mains will be paid for in the unit price bid per foot of the respective line sizes. It shall include all labor, equipment, excavation, backfill and materials to complete the work.

G. 3/4" THROUGH 2" WATER SERVICES

1. General

Where not otherwise noted on the plans, all water services shall be at least 3/4" I.D. and shall have a minimum cover of 36" except at the last 2 feet adjacent to the curb stop. The curb stop shall be set 24" below finish grade, and 2 ft. from property line for 3/4" - 1" services, or 3 ft. from property line for 1½" - 2" services. "Solder sweat joints" will not be permitted. Service lines may be installed after rough grading, but shall be completed before roadway construction begins. The Project Engineer shall be the judge of quality and fitness for the intended use, of all materials proposed to be installed.

2. Copper Tubing and Fittings or High Moleculer Density Polyethylene Tubing.

All Copper Tubing shall be new seamless copper, conforming to all requirements of A.S.T.M. Designation B88-49, Type K, soft.

All fittings used in connection with copper tubing, shall be new, copper or bronze and shall equal or exceed those manufactured by the Mueller Company in quality and fitness for the intended use.

5. Corporation Stops

All corporation stops shall be of bronze which shall equal or exceed those manufactured by the Mueller Company in quality and fitness for the intended use.

Corporation Stops for 3/4" and 1" Services shall be furnished with Mueller inlet thread and copper outlet. If galvanized iron pipe is to be used, it shall be connected to the outlet with a 24" copper gooseneck.

Corporation Stops for 1½" and 2" Services shall be furnished with tapered Mueller inlet threads.

6. Curb Stops

All curb stops shall be bronze, of the inverted key type, and shal equal or exceed those manufactured by the Mueller Company in quality anc fitness for the intended use.

7. Measurement and Payment

Water services will be paid for on a unit basis complete in place at the unit price bid for respective sizes, including fittings, service clamps, Corporation stops, curb stops and all labor, tools, equipment, excavation, backfill and incidentals necessary to complete the work.

H. Blasting

1- In certain areas of the construction malapai or other types of rock may be encountered. When blasting is required the contractor shall take all necessary precautions for the protection of all adjacent propar ties. Work shall be accomplished in strict compliance of the state and local requirement covering blasting and shall include the use of mattins as approved by the Engineer.

Where rock is encountered in the job in the excavations for the mains no extra payment will be made, the payment shall be the amount per foot bid for the complete excavation, Bakkfill, pipe, cleanup, etc for the complete installation.

NOTE: WHERE DIFFERENCES OR VARIANCES MAY OCCUR BETWEEN THESE SPECIFICATIONS AND THE DETAILS THE STANDARD DETAILS SHALL TAKE PRESCIENCE

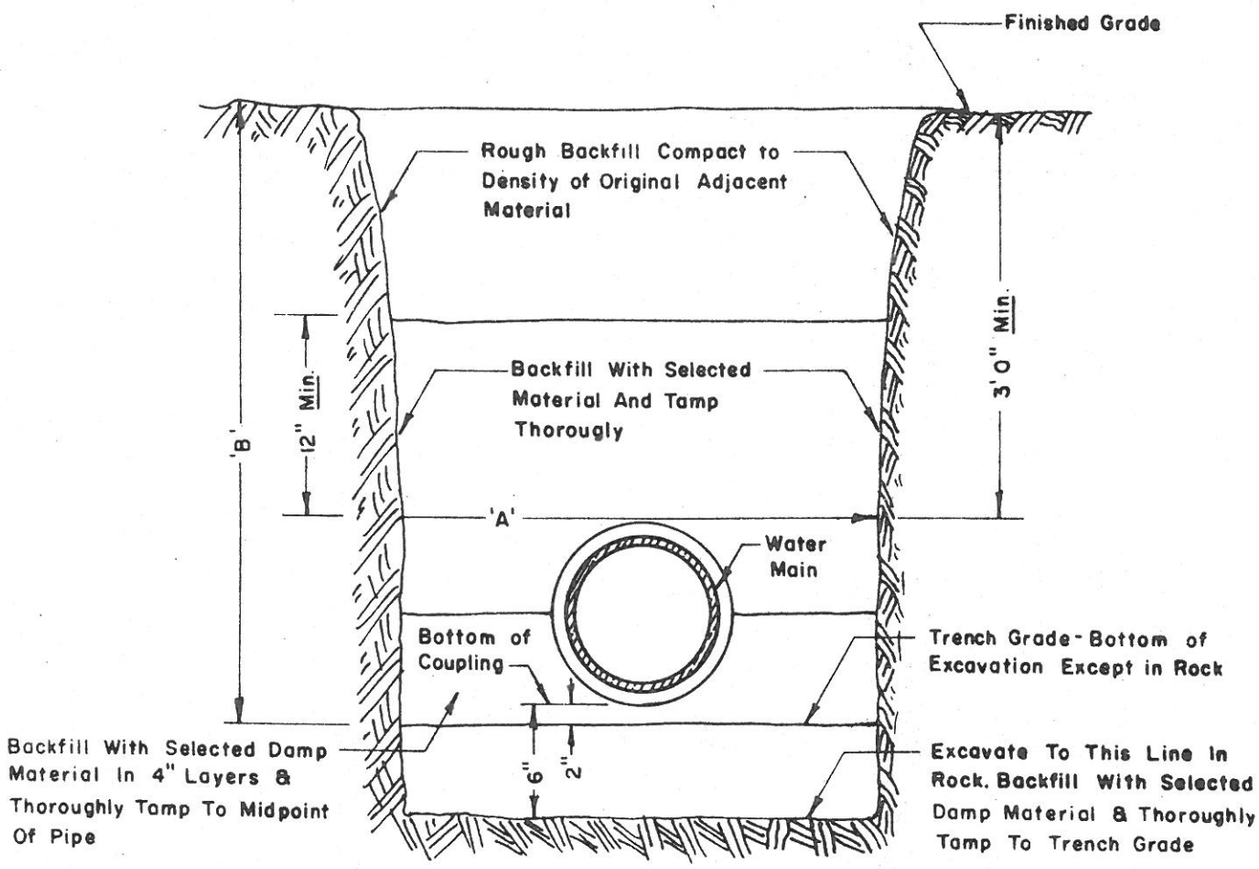

Pipe Size	Dimension 'A'		Dimension 'B'
	Min.	Max.	
3"-4"	18"	28"	40"
6"-8"	20"	32"	48"
10"-12"	24"	36"	52"
16"-18"	30"	40"	58"
24"	36"	48"	68"

S-1

ARIZONA WATER COMPANY

STANDARD SPECIFICATION

FOR THE INSTALLATION OF

TYPICAL CEMENT ASBESTOS WATER MAIN

DRAWN BY: R.W.H
CHECKED BY: R.A.B.
APPROVED BY: L.L.M.
DATE: SEPTEMBER 30, 1970

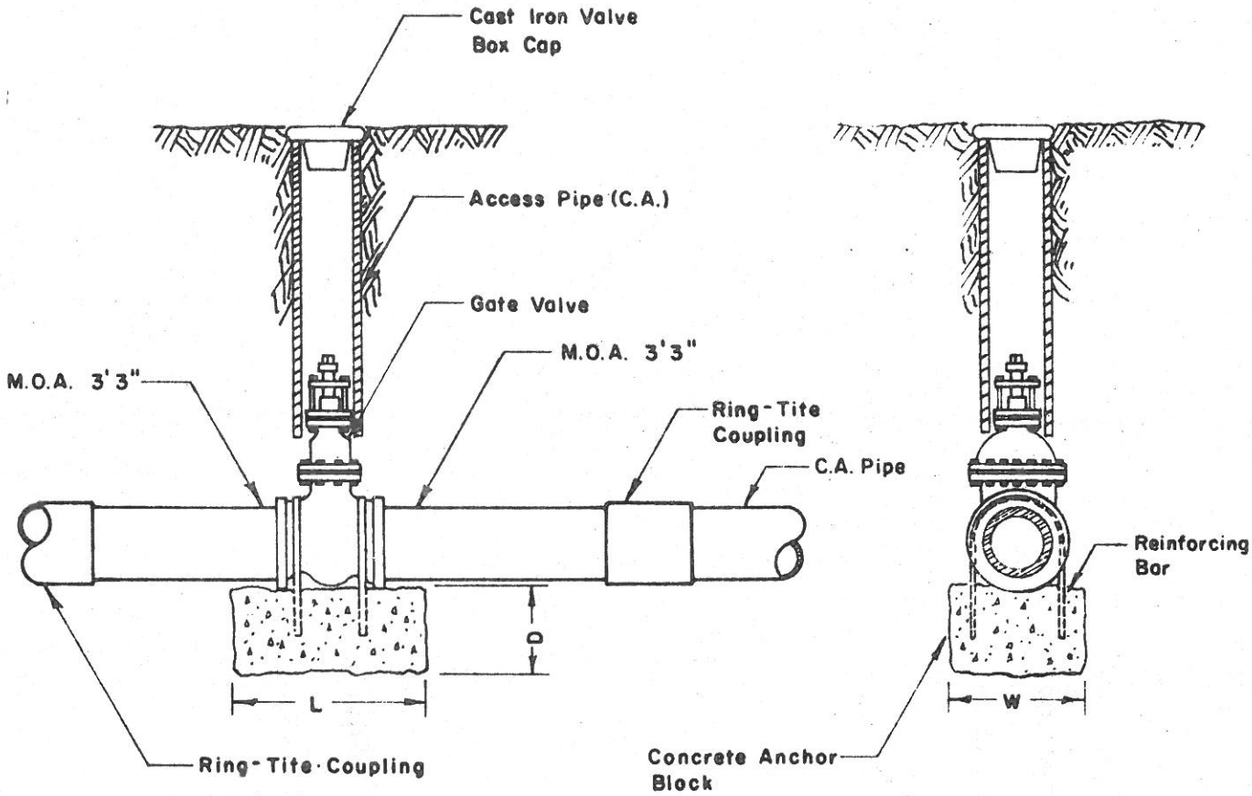

Valve Size	Valve Box Cap	Access Pipe	Concrete Anchor Block			Reinforcing Bar Anchor
			L	W	D	
4"	6"C.I.	6"C.A.	1'-4"	1'-0"	8"	Not Required
6"	6"C.I.	6"C.A.	1'-6"	1'-2"	8"	Not Required
8"	8"C.I.	8"C.A.	1'-6"	1'-4"	10"	Required
10"	8"C.I.	8"C.A.	1'-8"	1'-6"	12"	Required
12"	8"C.I.	8"C.A.	1'-8"	1'-8"	12"	Required

S-2A

ARIZONA WATER COMPANY

STANDARD SPECIFICATION

FOR THE INSTALLATION OF

TYPICAL GATE VALVE

DRAWN BY: R.W.H.
CHECKED BY: R.A.B.

APPROVED BY: L.L.M.
DATE: OCTOBER 1, 1970

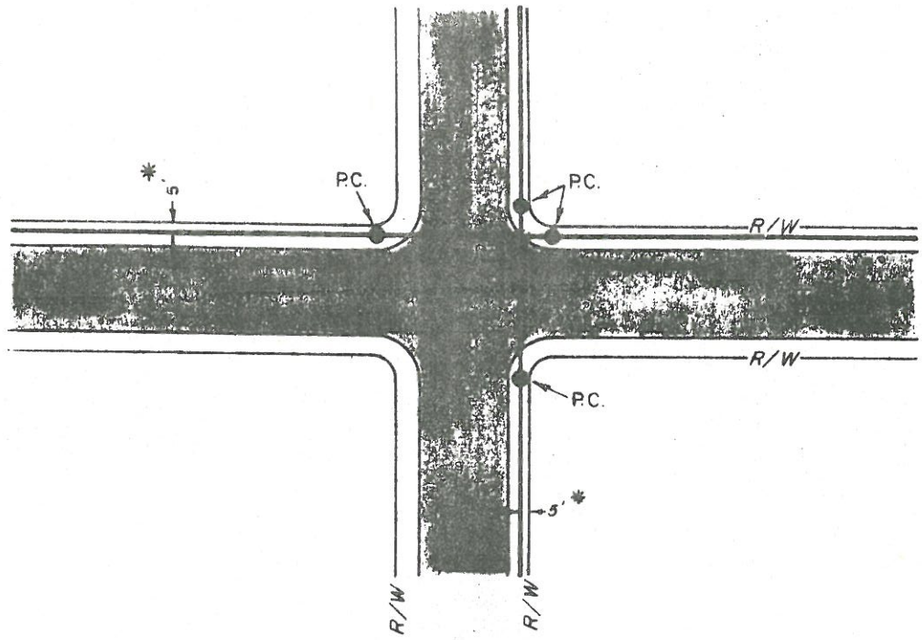

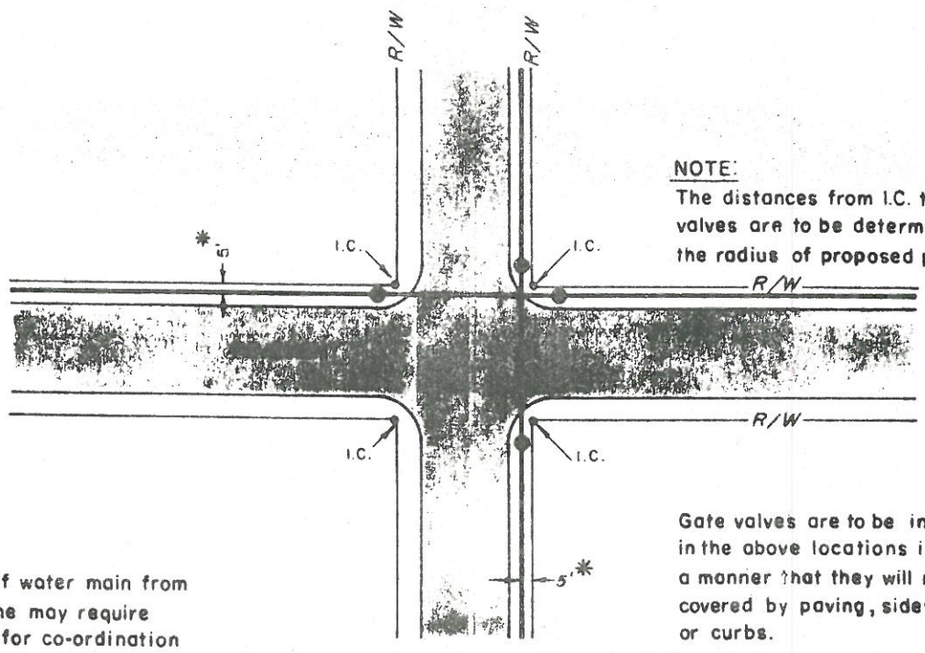

NOTE:
The distances from I.C. to gate valves are to be determined by the radius of proposed pavement.

Gate valves are to be installed in the above locations in such a manner that they will not be covered by paving, sidewalks, or curbs.

* Location of water main from property line may require alteration for co-ordination with curb, sidewalk, or paving requirements. Variations are to be approved by A.W.Co. Engineering Department.

S-2B

● – Gate Valve

P.C. – Point of Curve

R/W – Right of Way Boundry

I.C. – Intersection Corner (of right of way lines)

ARIZONA WATER COMPANY

STANDARD SPECIFICATION

FOR THE INSTALLATION OF

TYPICAL GATE VALVES (LOCATION)

DRAWN BY: R.W.H.	APPROVED BY: L.L.M.
CHECKED BY: R.A.B.	DATE: DECEMBER 17, 1970

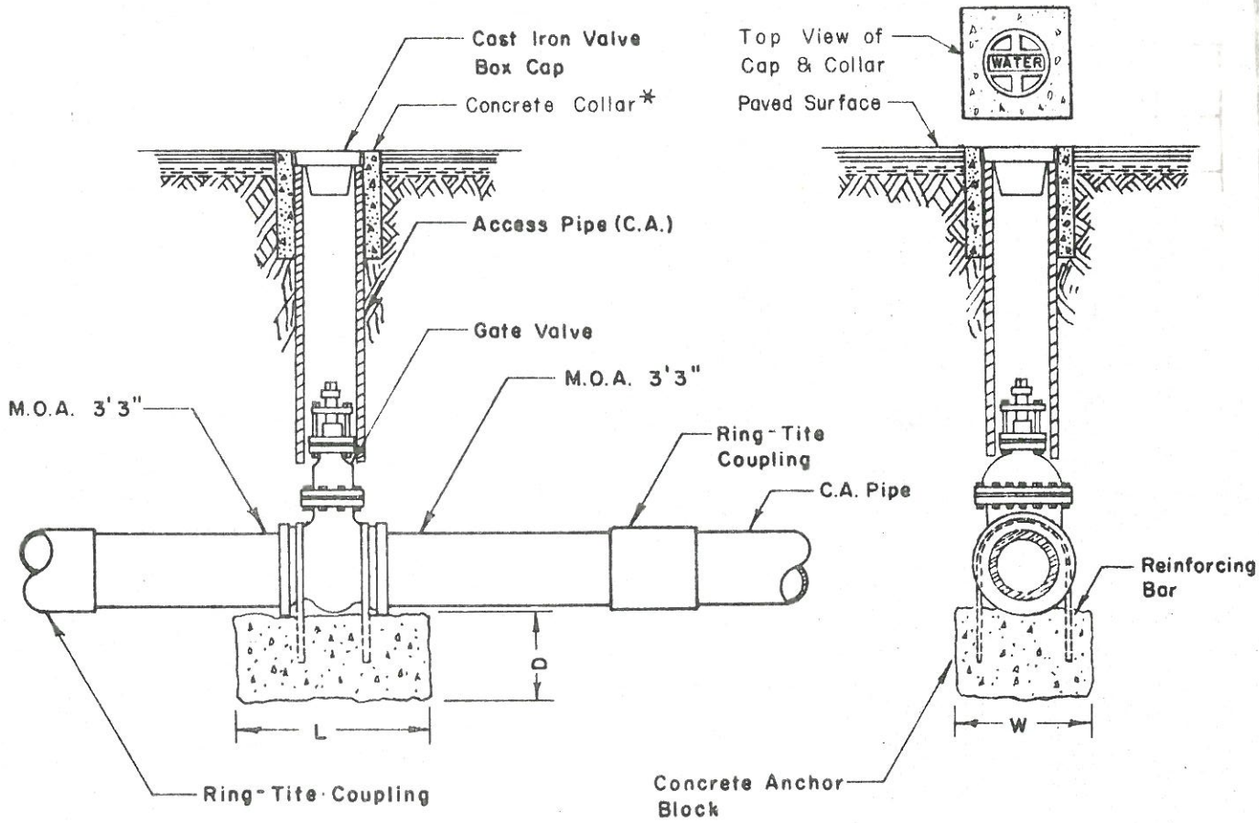

Valve Size	Valve Box Cap	Access Pipe	Concrete Anchor Block			Reinforcing Bar Anchor
			L	W	D	
4"	6"C.I.	6"C.A.	1'-4"	1'-0"	8"	Not Required
6"	6"C.I.	6"C.A.	1'-6"	1'-2"	8"	Not Required
8"	8"C.I.	8"C.A.	1'-6"	1'-4"	10"	Required
10"	8"C.I.	8"C.A.	1'-8"	1'-6"	12"	Required
12"	8"C.I.	8"C.A.	1'-8"	1'-8"	12"	Required

*NOTES:

1. Concrete collar is to be used only when valve is under pavement or concrete (streets, sidewalks, etc.).
2. Concrete collar is to measure 12"x12"x12" minimum outside dimensions.
3. Concrete collar is to be poured flush with finished grade.

S-2C

ARIZONA WATER COMPANY

STANDARD SPECIFICATION

FOR THE INSTALLATION OF

TYPICAL GATE VALVE UNDER PAVED SURFACE

DRAWN BY: R.W.H.
CHECKED BY: R.A.B.

APPROVED BY: L.L.M.
DATE: OCTOBER 1, 1970

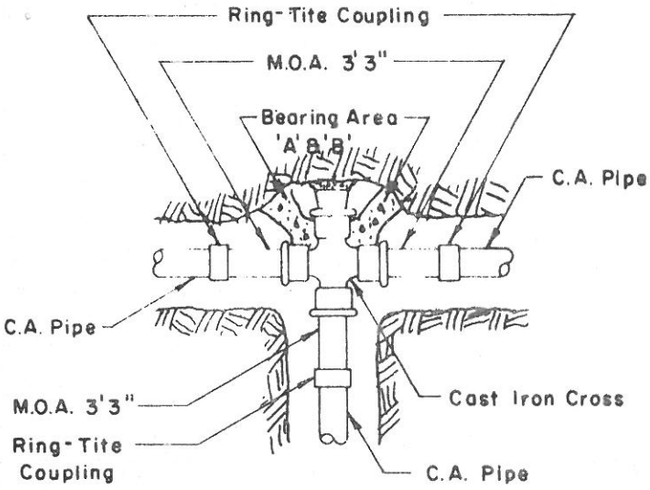

FITTING
THRUST BLOCK SCHEDULE

Size of Side Outlet	Min. Bearing Area 'A'	Min. Bearing Area 'B'
18"		
16"		
12"	11 Sq. Ft.	11 Sq. Ft.
10"	8 Sq. Ft.	8 Sq. Ft.
8"	5 Sq. Ft.	5 Sq. Ft.
6"	3 Sq. Ft.	3 Sq. Ft.
4"	2 Sq. Ft.	2 Sq. Ft.

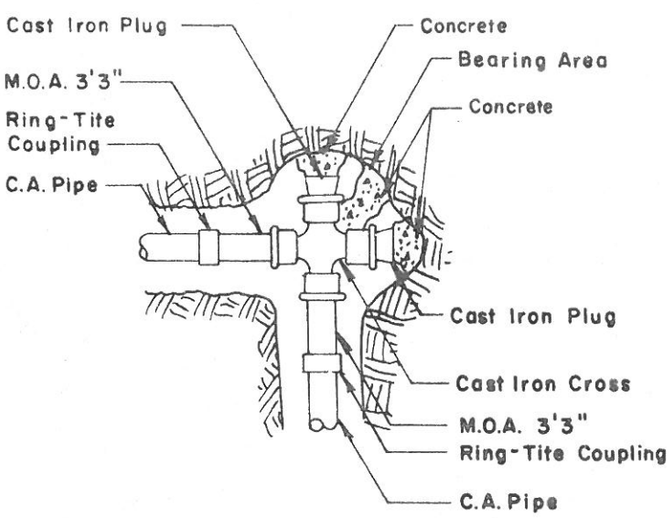

FITTING
THRUST BLOCK SCHEDULE

Largest Outlet On Cross	Min. Bearing Area
18"	
16"	
12"	23 Sq. Ft.
10"	16 Sq. Ft.
8"	10 Sq. Ft.
6"	6 Sq. Ft.
4"	3 Sq. Ft.

Note:
For installation instructions, see typical tees drawing. (S-4)

S-3

ARIZONA WATER COMPANY

STANDARD SPECIFICATION
FOR THE INSTALLATION OF

TYPICAL CROSSES

DRAWN BY: R.W.H.
CHECKED BY: R.A.B.

APPROVED BY: L.L.M.
DATE: SEPTEMBER 29, 1970

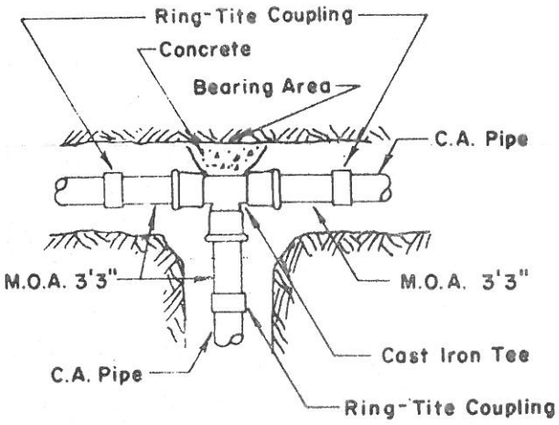

FITTING
THRUST BLOCK SCHEDULE

Size of Side Outlet	Min. Bearing Area
12"	16 Sq.Ft.
10"	11 Sq. Ft.
8"	7 Sq. Ft.
6"	4 Sq. Ft.
4"	2 Sq. Ft.

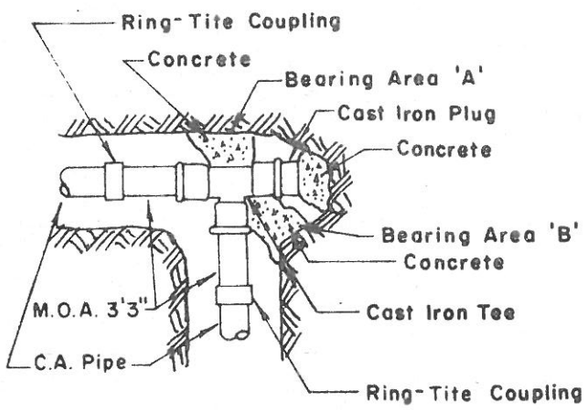

FITTING
THRUST BLOCK SCHEDULE

Largest Outlet On Tee	Min. Bearing Area 'A'	Min. Bearing Area 'B'
12"	32 Sq.Ft.	2 Sq. Ft.
10"	28 Sq.Ft	2 Sq. Ft.
8"	14 Sq.Ft.	2 Sq. Ft.
6"	8 Sq.Ft.	2 Sq. Ft.
4"	4 Sq. Ft.	2 Sq. Ft.

Notes:

1. *Fittings are to be installed in accordance with manufacturers recommendations.*
2. *Thrust blocks are to bear on undisturbed earth.*
3. *Concrete for thrust blocks to be 2000 P.S.I. at 7 days.*
4. *Construct thrust blocks so that thrust from pipe is centered on block as nearly as possible*
5. *All thrust blocks are to have minimum bearing areas against earth as shown unless otherwise specified.*
6. *For plug thrust block dimensions, see typical drawing, pg. S-6.*

S-4

ARIZONA WATER COMPANY

STANDARD SPECIFICATION

FOR THE INSTALLATION OF

TYPICAL TEES

REVISION: 1 BY: A.M.A DATE: MARCH 22, 1972

DRAWN BY: R.W.H.
CHECKED BY: R.A.B.

APPROVED BY: L.L.M.
DATE: SEPTEMBER 28, 1970

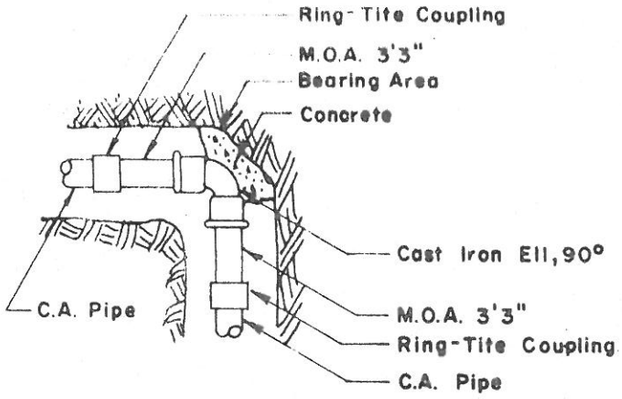

THRUST BLOCK SCHEDULE

Size of Ell	Min. Bearing Area
12"	23 Sq. Ft.
10"	16 Sq. Ft.
8"	10 Sq. Ft.
6"	6 Sq. Ft.
4"	3 Sq. Ft.

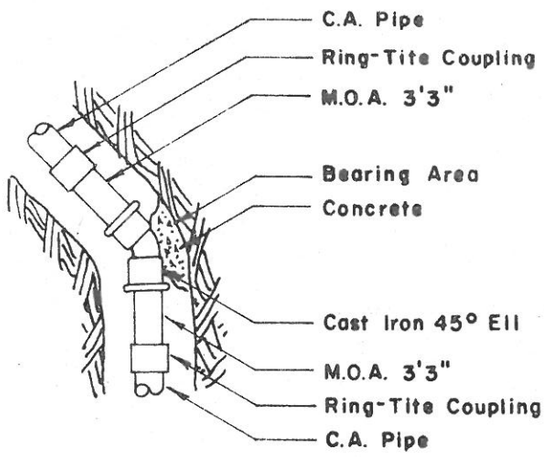

THRUST BLOCK SCHEDULE

Size of Ell	Min. Bearing Area
12"	12 Sq. Ft.
10"	9 Sq. Ft.
8"	5 Sq. Ft.
6"	3 Sq. Ft.
4"	2 Sq. Ft.

Note:
For installation instructions, see typical tees drawing. (S-4)

S-5

ARIZONA WATER COMPANY

STANDARD SPECIFICATION
FOR THE INSTALLATION OF

TYPICAL ELLS

DRAWN BY: R.W.H.
CHECKED BY: R.A.B.
APPROVED BY: L.L.M.
DATE: SEPTEMBER 30, 1970

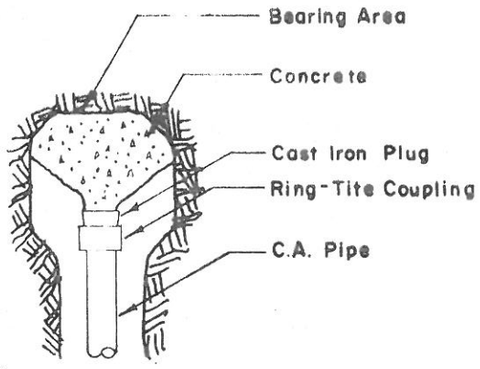

THRUST BLOCK SCHEDULE

Size of Plug	Min. Bearing Area
12"	16 Sq. Ft.
10"	12 Sq. Ft.
8"	7 Sq. Ft.
6"	4 Sq. Ft.
4"	2 Sq. Ft.
3"	2 Sq. Ft.

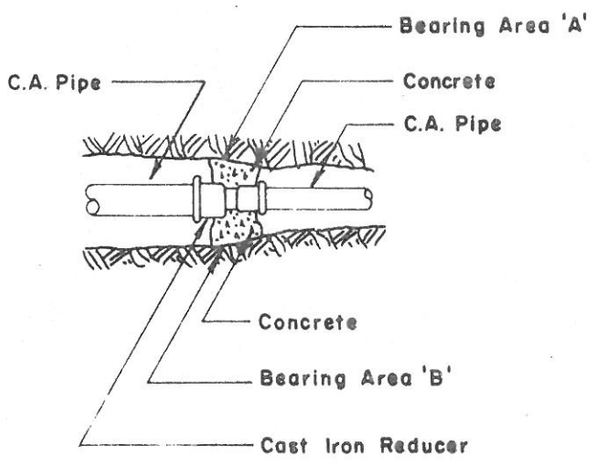

THRUST BLOCK SCHEDULE

Size Of Reducer	Min. Bearing Area 'A'	Min. Bearing Area 'B'
12" X 10"	3 Sq. Ft.	3 Sq. Ft.
12" X 8"	6 Sq. Ft.	6 Sq. Ft.
12" X 6"	8 Sq. Ft.	8 Sq. Ft.
12" X 4"	10 Sq. Ft.	10 Sq. Ft.
10" X 8	3 Sq. Ft.	3 Sq. Ft.
10" X 6"	5 Sq. Ft	5 Sq Ft.
10" X 4"	7 Sq. Ft.	7 Sq. Ft.
8" X 6"	2 Sq. Ft.	2 Sq. Ft.
8" X 4"	4 Sq. Ft.	4 Sq. Ft.
6" X 4"	2 Sq. Ft.	2 Sq. Ft.

Note:
For installation instructions, see typical tees drawing. (S-4)

S-6

ARIZONA WATER COMPANY

STANDARD SPECIFICATION

FOR THE INSTALLATION OF

TYPICAL PLUGS & REDUCERS

DRAWN BY: R.W.H.
CHECKED BY: R.A.B.

APPROVED BY: L.L.M.
DATE: SEPTEMBER 29, 1970

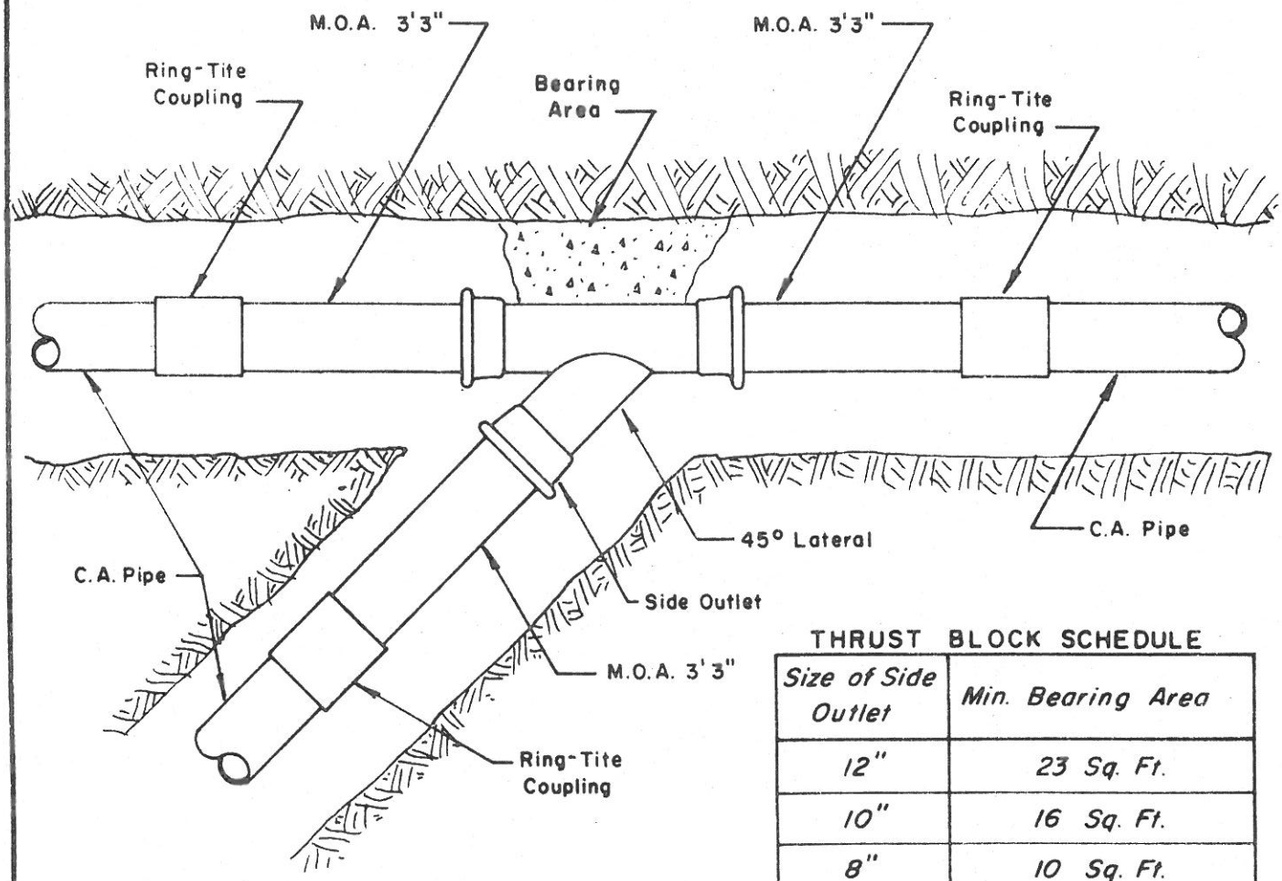

THRUST BLOCK SCHEDULE

Size of Side Outlet	Min. Bearing Area
12"	23 Sq. Ft.
10"	16 Sq. Ft.
8"	10 Sq. Ft.
6"	6 Sq. Ft.
4"	3 Sq. Ft.

Note:
For installation instructions, see typical tees drawing. (S-4)

S-7

ARIZONA WATER COMPANY

STANDARD SPECIFICATION

FOR THE INSTALLATION OF

TYPICAL LATERALS

DRAWN BY: R.W.H.
CHECKED BY: R.A.B.
APPROVED BY: L.L.M.
DATE: SEPTEMBER 25, 1970

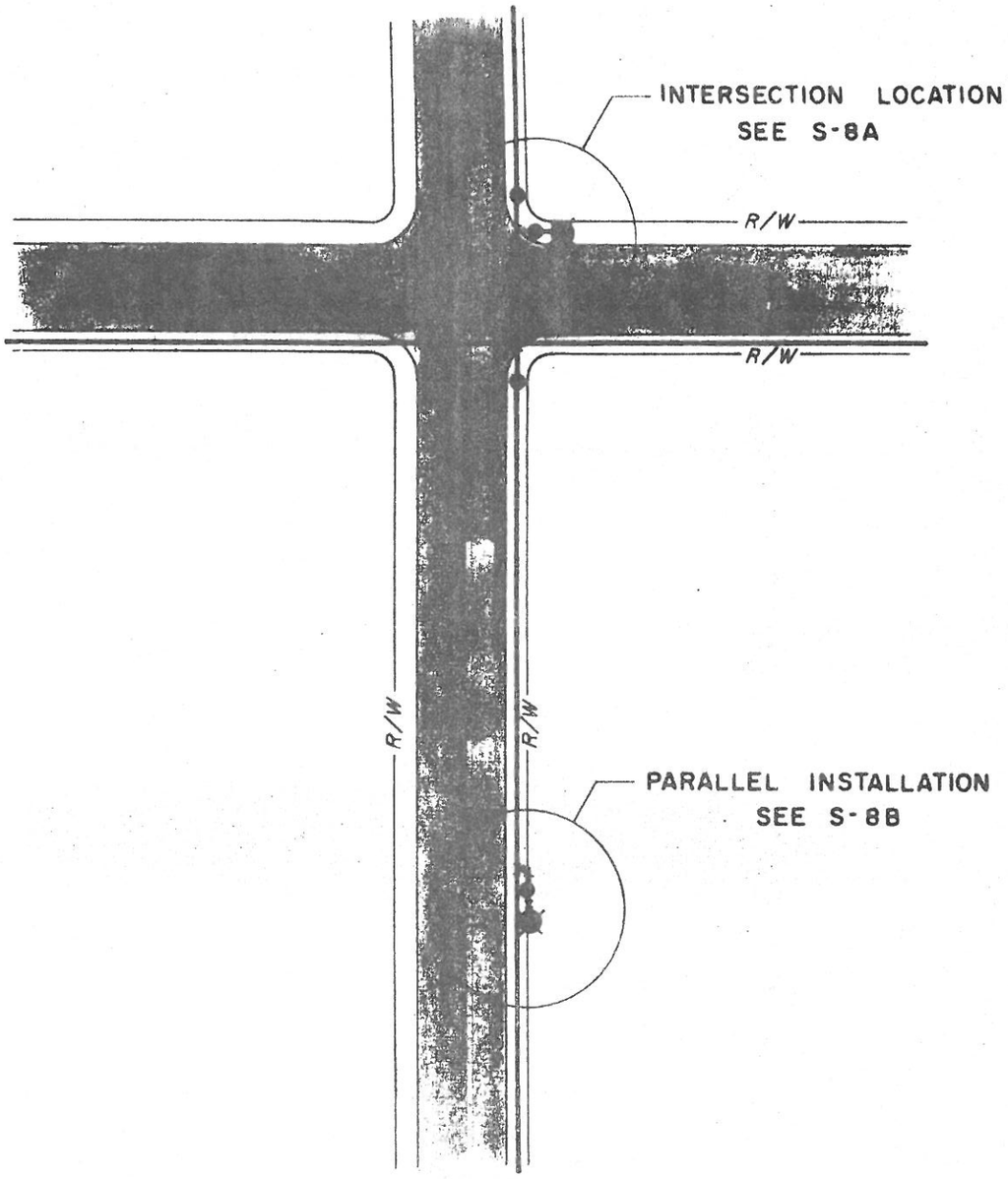

S-8

ARIZONA WATER COMPANY

STANDARD SPECIFICATION

FOR THE INSTALLATION OF

TYPICAL FIRE HYDRANTS (LOCATION)

DRAWN BY: R.W.H.	APPROVED BY: L.L.M.
CHECKED BY: R.A.B.	DATE: MAY 11, 1971

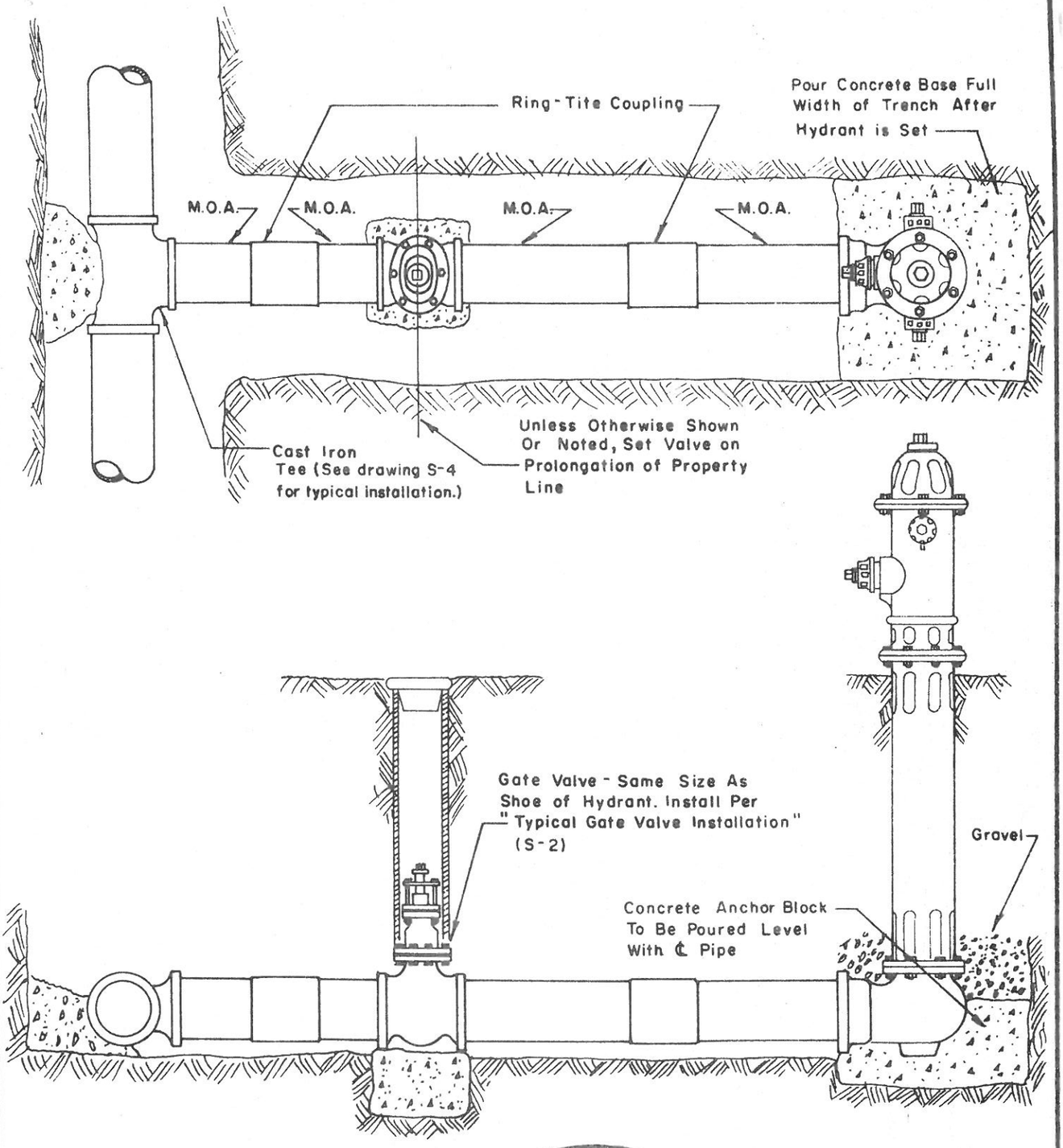

S-8A

ARIZONA WATER COMPANY

STANDARD SPECIFICATION

FOR THE INSTALLATION OF

TYPICAL FIRE HYDRANT USING STANDARD RING-TITE VALVE & TEE

DRAWN BY: R.W.H.	APPROVED BY: L.L.M.
CHECKED BY: R.A.B.	DATE: SEPTEMBER 25, 1970

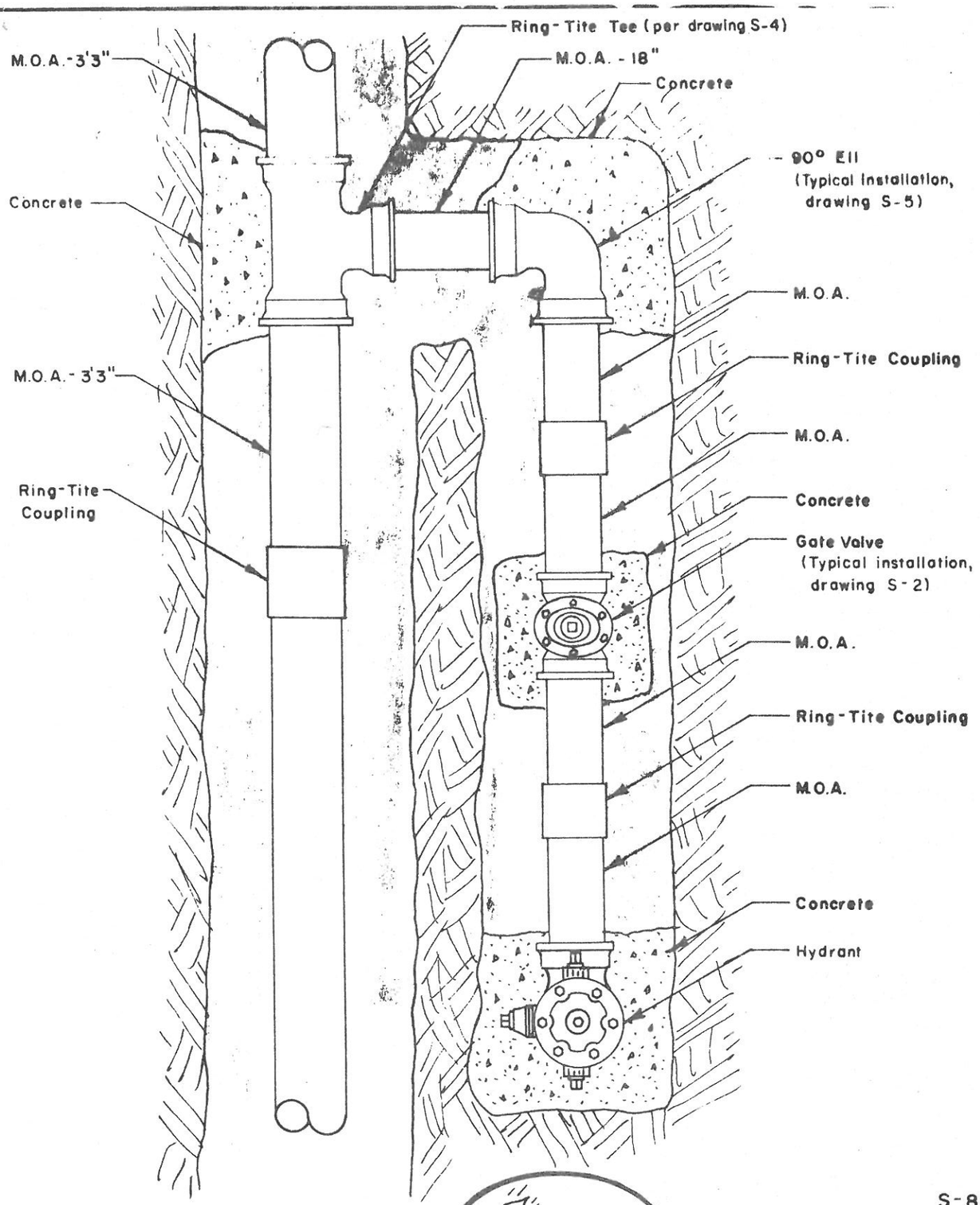

S-8B

ARIZONA WATER COMPANY

STANDARD SPECIFICATION

FOR THE INSTALLATION OF

TYPICAL FIRE HYDRANT (PARALLEL)

DRAWN BY: R.W.H.	APPROVED BY: L.L.M.
CHECKED BY: R.A.B.	DATE: MAY 19, 1971

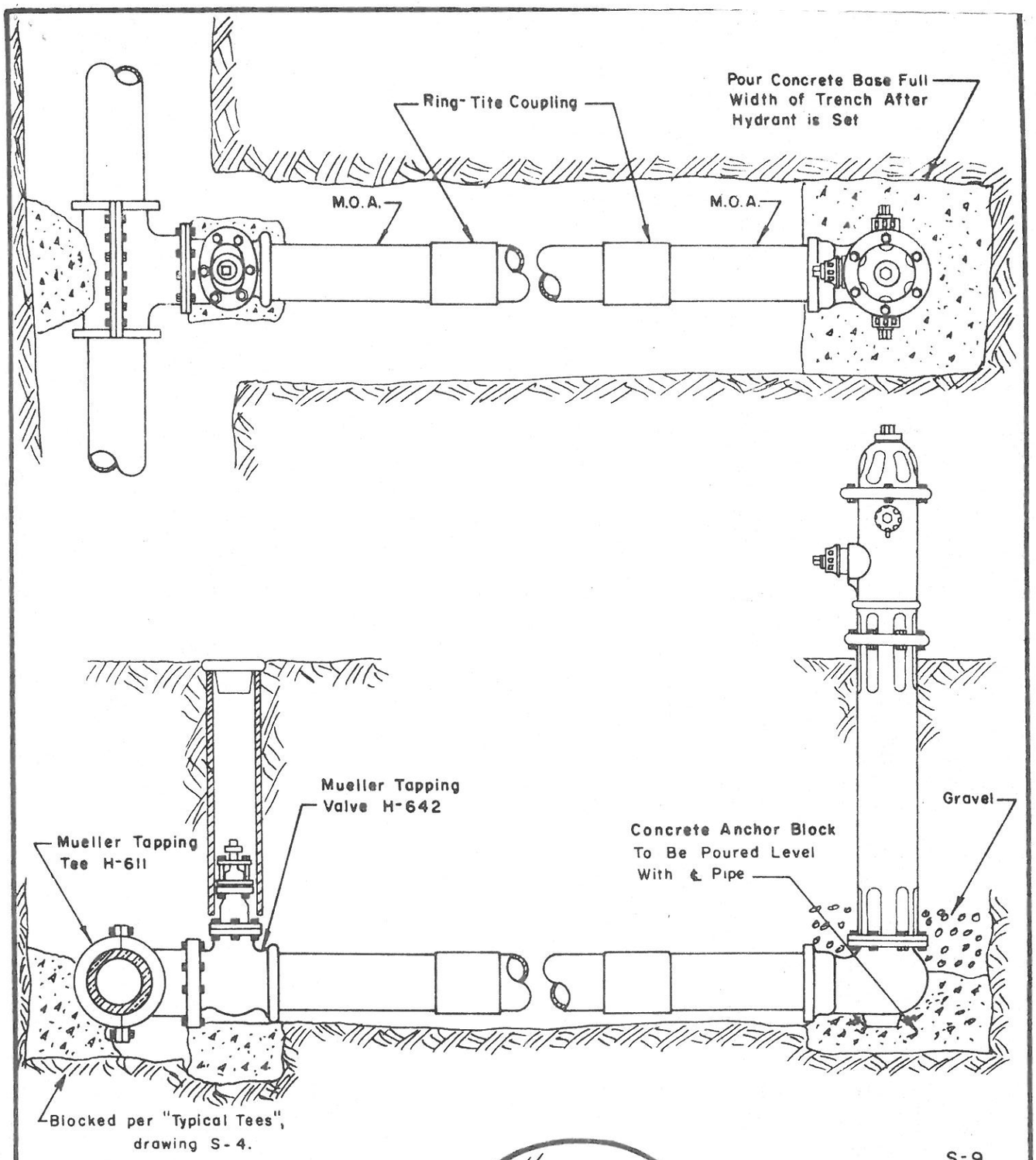

S-9

STANDARD SPECIFICATION

FOR THE INSTALLATION OF

TYPICAL FIRE HYDRANT USING TAPPING VALVE & SLEEVE

DRAWN BY: R.W.H.	APPROVED BY: L.L.M.
CHECKED BY: R.A.B.	DATE: SEPTEMBER 25, 1970

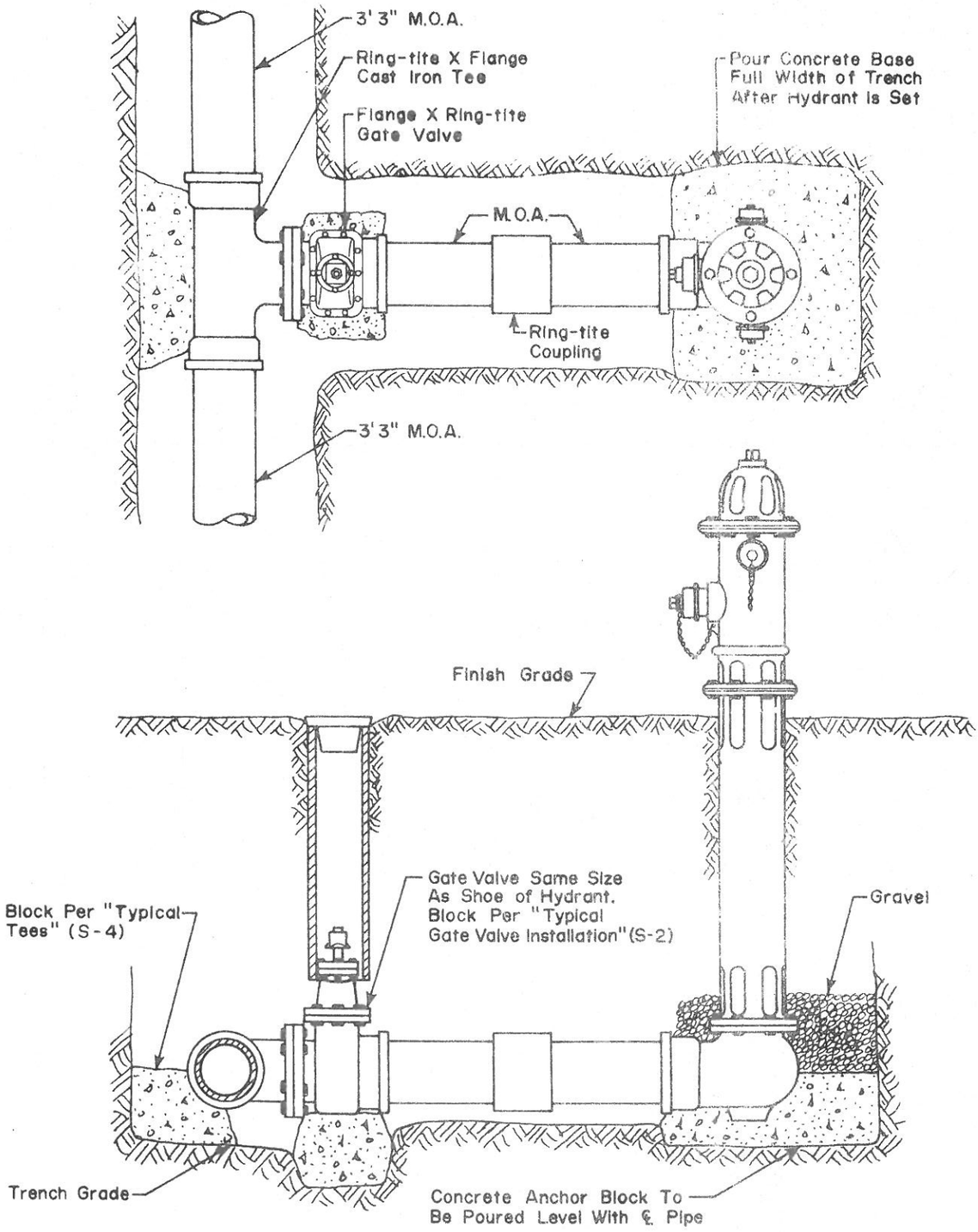

S-9A

ARIZONA WATER COMPANY

SPECIFICATION
FOR THE INSTALLATION OF
PINEWOOD FIRE HYDRANTS

DRAWN BY: L.M.B.	APPROVED BY: L.L.M.
CHECKED BY: T.D.B.	DATE: MARCH 21, 1974

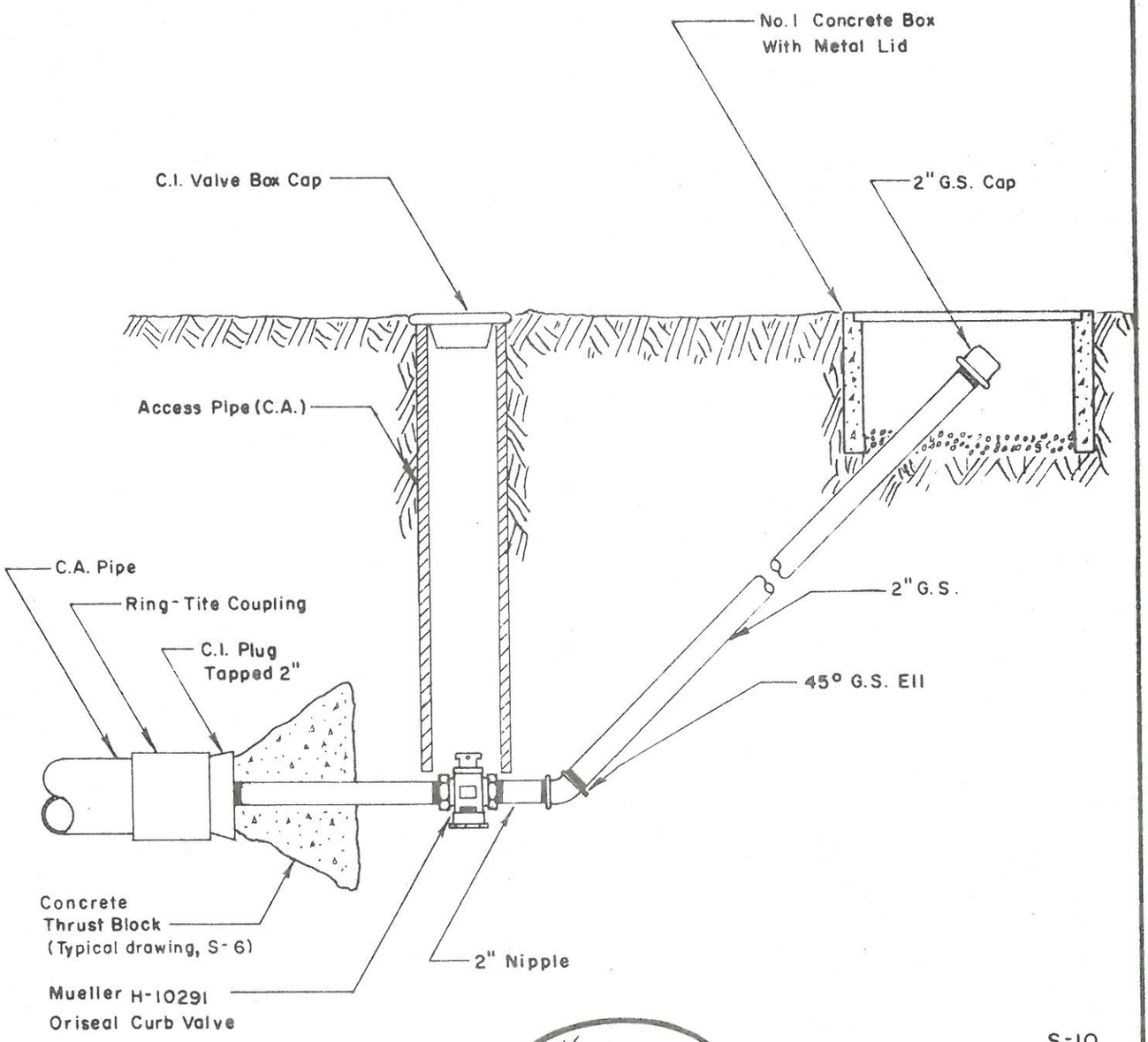

S-10

ARIZONA WATER COMPANY

STANDARD SPECIFICATION

FOR THE INSTALLATION OF

TYPICAL 2" BLOWOFF DEVICE

DRAWN BY: R.W.H.	APPROVED BY: L.L.M.
CHECKED BY: R.A.B.	DATE: OCTOBER 2, 1970

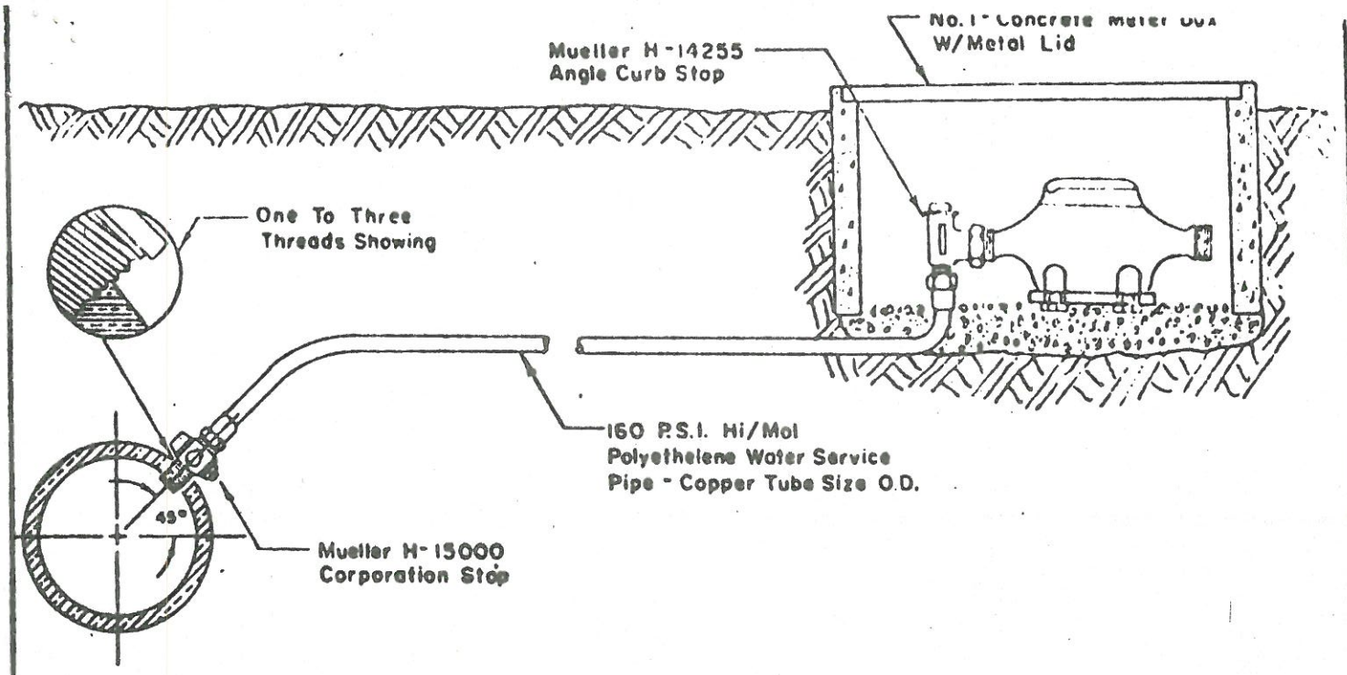

DIRECT TAP CONNECTION TO CEMENT-ASBESTOS, ~~CAST IRON, AND HEAVY WALL STEEL WATER MAIN~~

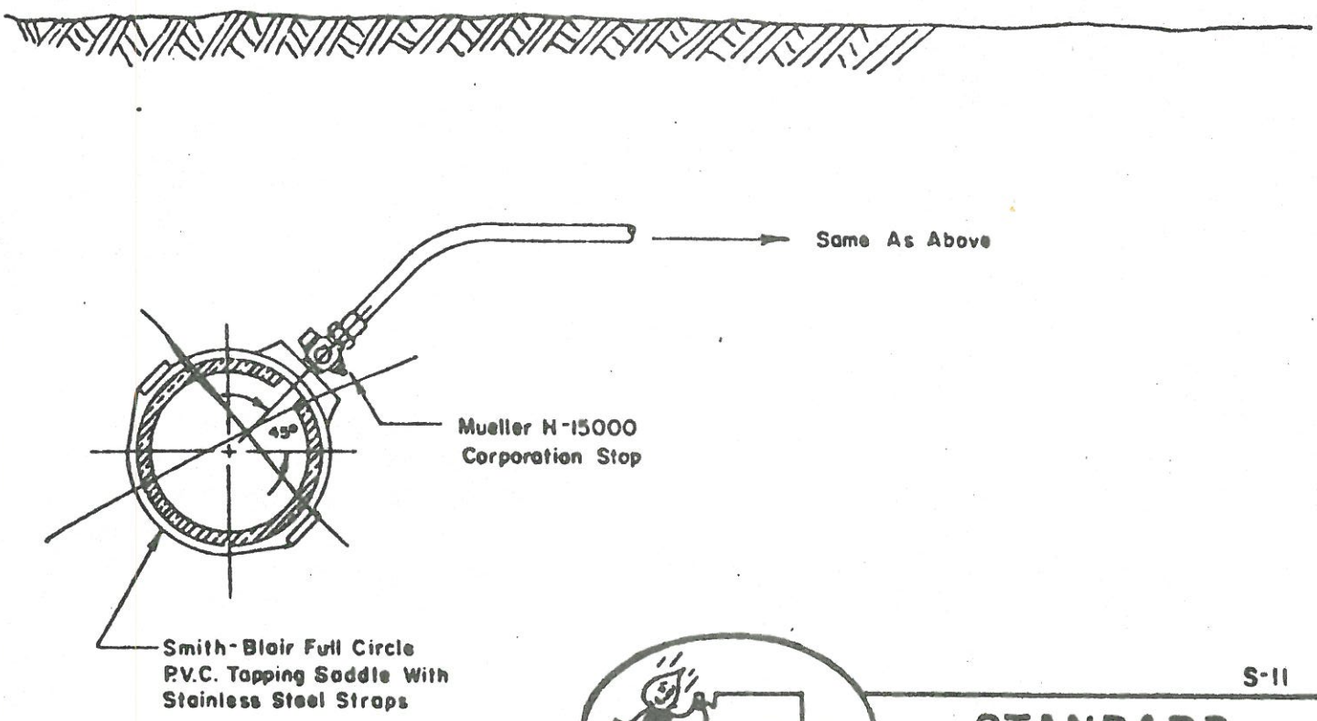

SADDLE TAP CONNECTION TO PLASTIC WATER MAIN

S-11

ARIZONA WATER COMPANY

STANDARD SPECIFICATION

FOR THE INSTALLATION OF

3/4" & 1" SERVICE CONNECTIONS

DRAWN BY: R.W.H	APPROVED BY: L.L.M
CHECKED BY: R.A.B.	DATE: OCTOBER 6, 1970

EXHIBIT "A"

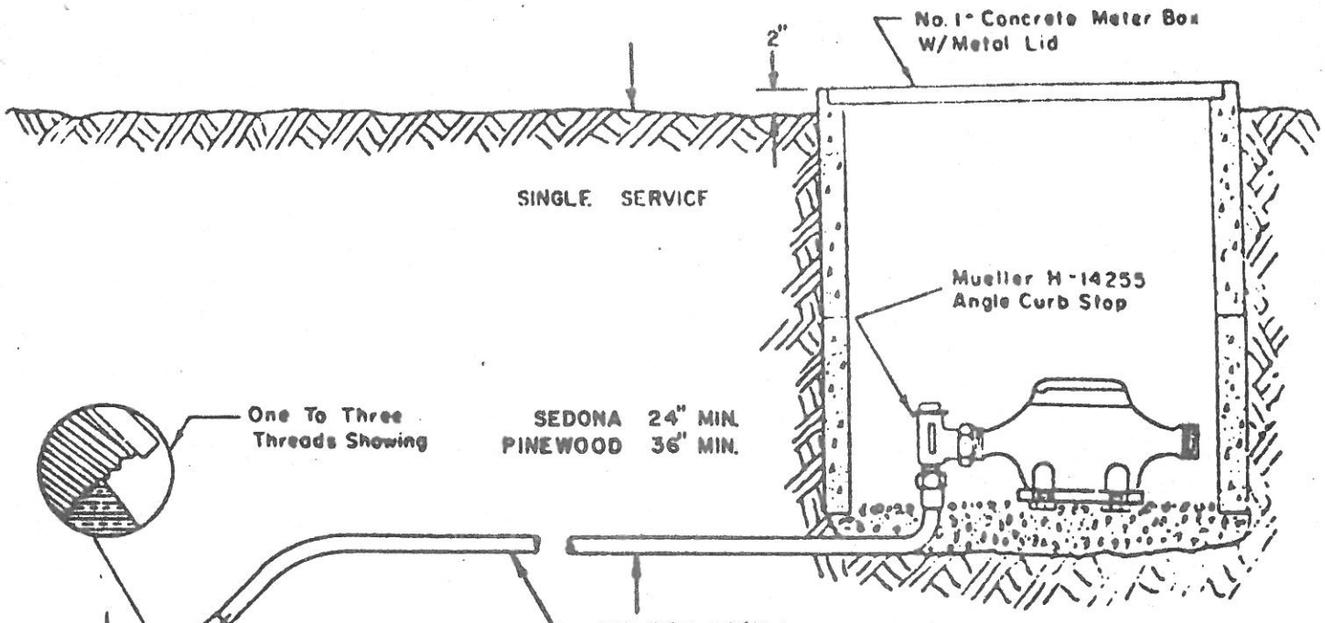

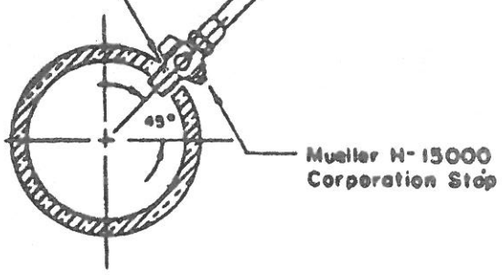

DIRECT TAP CONNECTION TO CEMENT-ASBESTOS, ~~CAST IRON, AND HEAVY WALL STEEL WATER MAIN~~

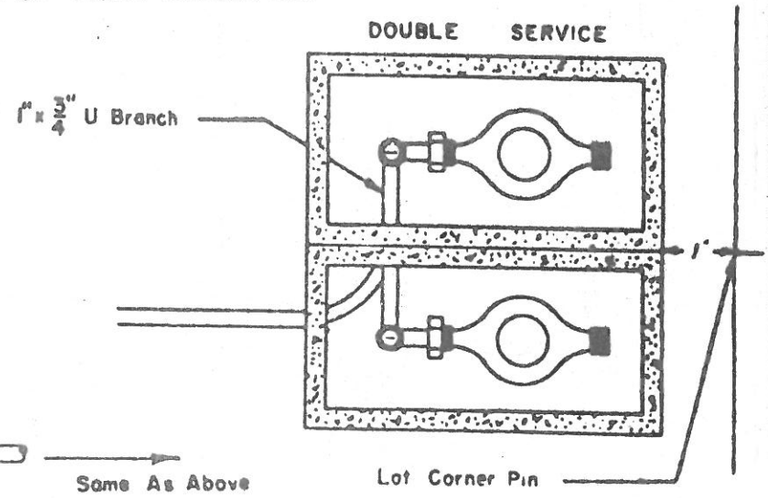

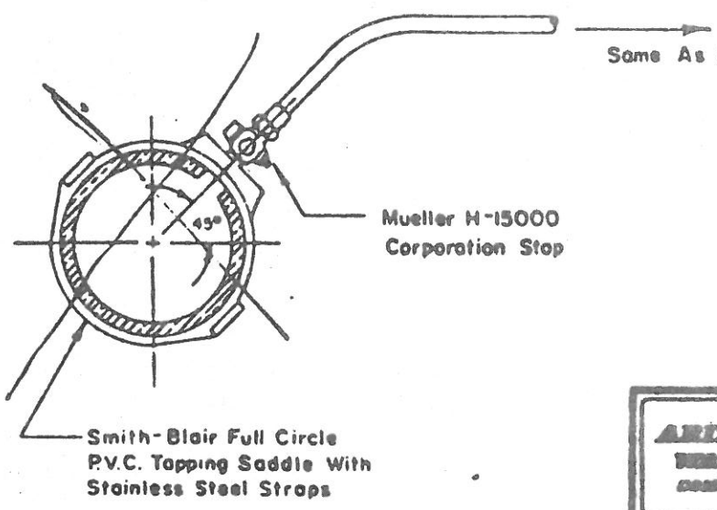

SADDLE TAP CONNECTION TO PLASTIC WATER MAIN

S-11A

ARIZONA WATER COMPANY

STANDARD SPECIFICATION

FOR THE INSTALLATION OF

3/4" & 1" SERVICE CONNECTIONS

DRAWN BY RWH
CHECKED BY RAB
APPROVED BY L.L.M.
DATE OCTOBER 5, 1970

EXHIBIT "A"
(xi)

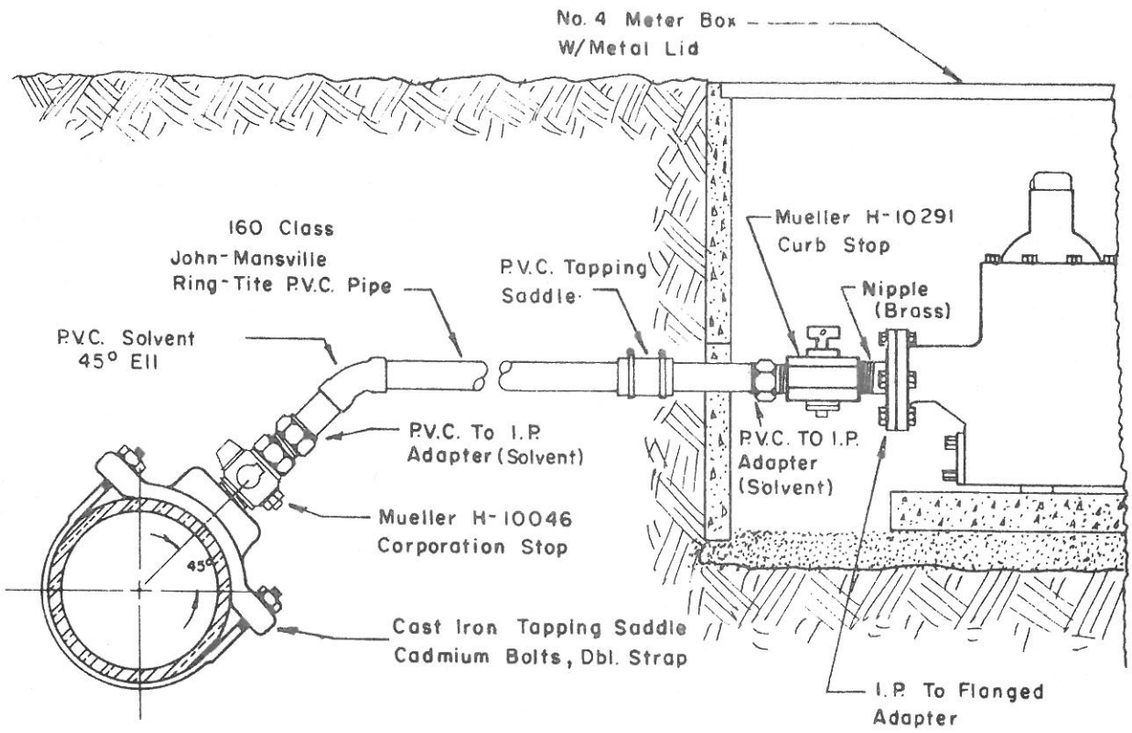

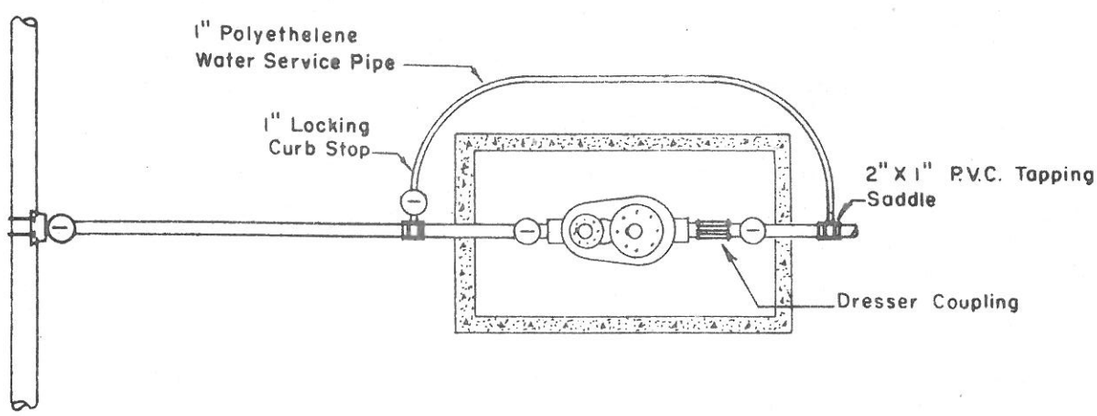

S-12

STANDARD SPECIFICATION

FOR THE INSTALLATION OF

1 1/2 & 2" SERVICE CONNECTIONS

REVISION:	BY:	DATE:
1	A.M.A	MARCH 22, 1972

DRAWN BY: R.W.H.
CHECKED BY: R.A.B.
APPROVED BY: L.L.M.
DATE: SEPTEMBER 22, 1970

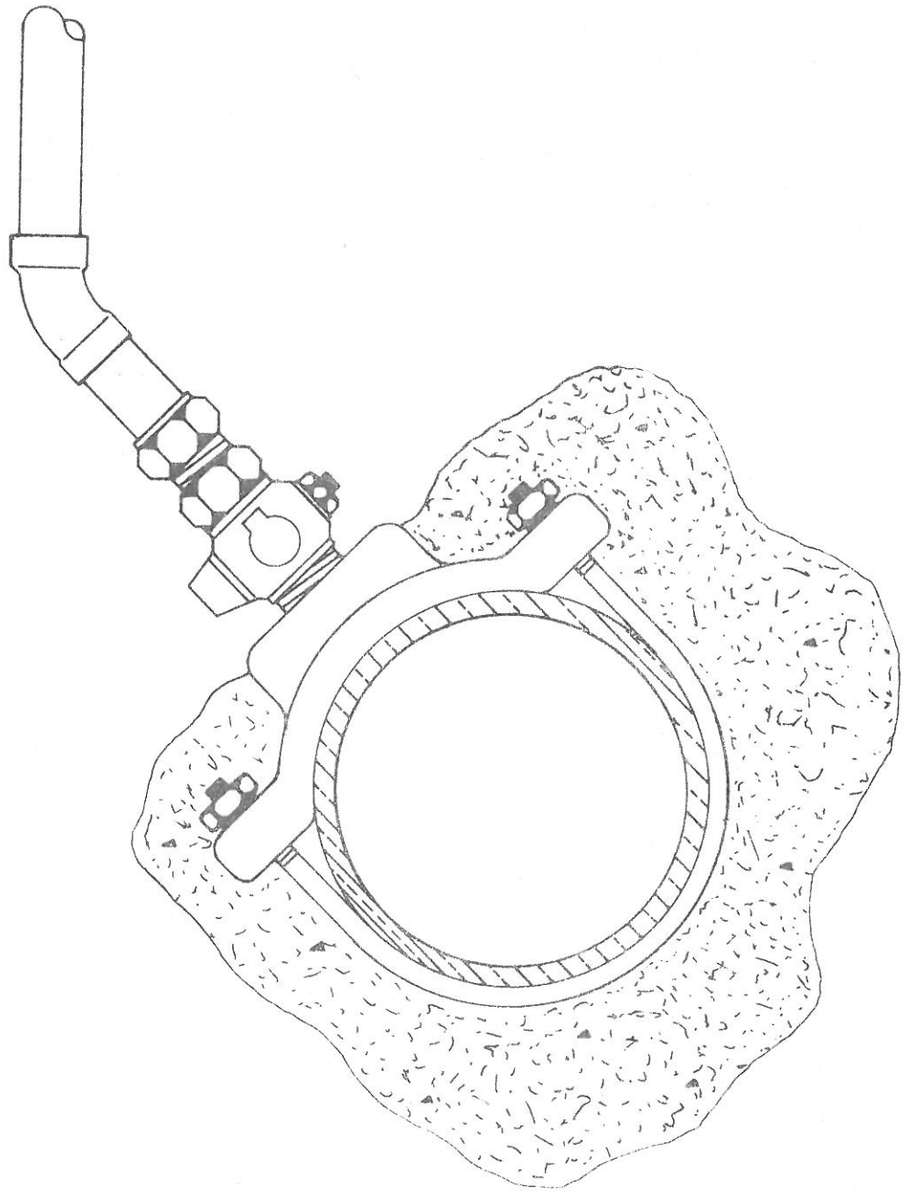

STANDARD SPECIFICATION FOR: S-12B

STANDARD 1 1/2 & 2" SERVICE CONNECTIONS

DRAWN: B. BAUDER	APPROVED: L.L.M.	DATE: 8/15/72	SCALE: NONE	E-102

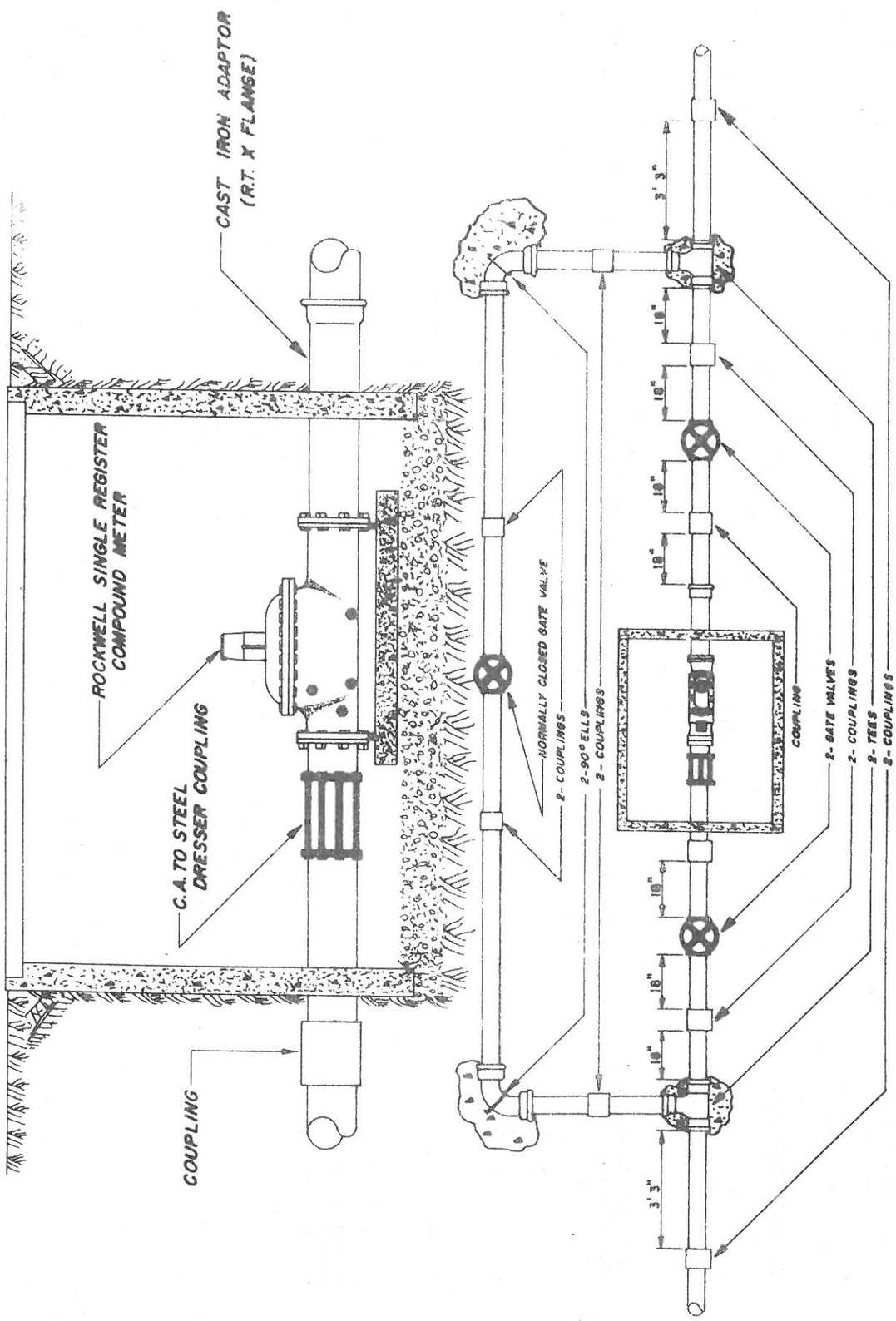

STANDARD SPECIFICATION FOR: S-13

STANDARD 4" & LARGER SERVICE CONNECTIONS

DRAWN: B. BAUDER	APPROVED: L.L.M.	DATE: 8/12/72	SCALE: NONE	E-101

CONCRETE VAULT

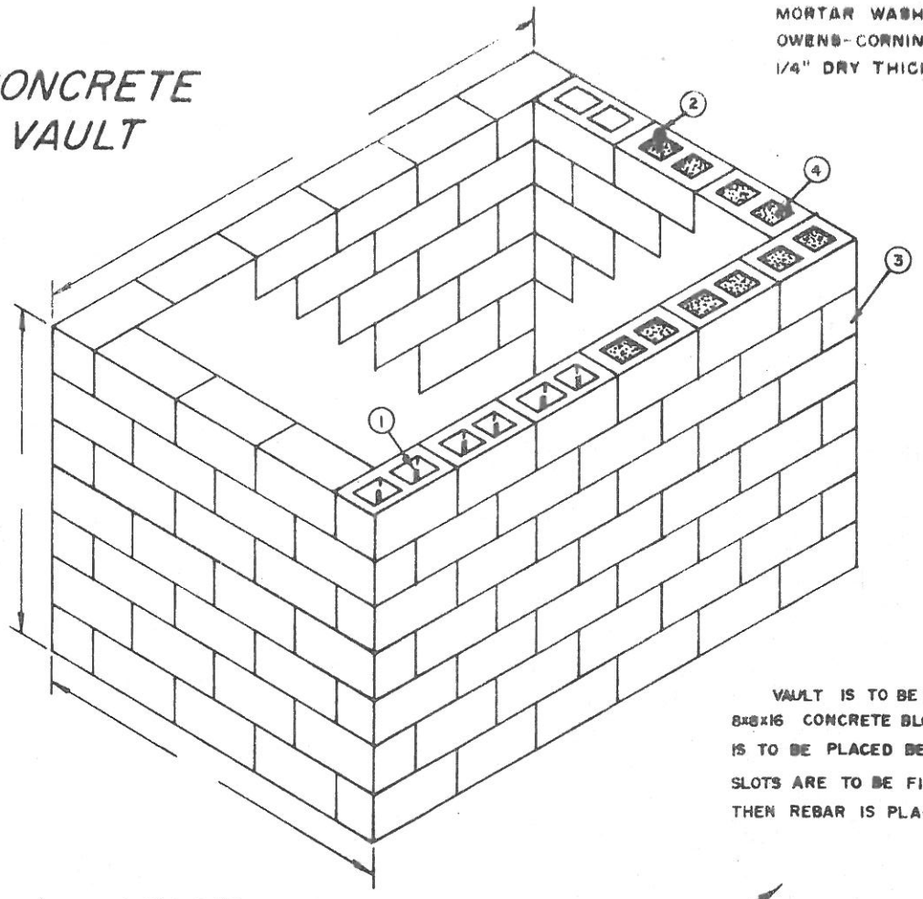

MORTAR WASH INSIDE WITH OWENS-CORNING BLOCK-BOND 1/4" DRY THICKNESS.

VAULT IS TO BE CONSTRUCTED OF 8x8x16 CONCRETE BLOCKS. NO MORTAR IS TO BE PLACED BETWEEN BLOCKS. SLOTS ARE TO BE FILLED WITH MORTAR THEN REBAR IS PLACED IN EACH SLOT.

VAULT COVER

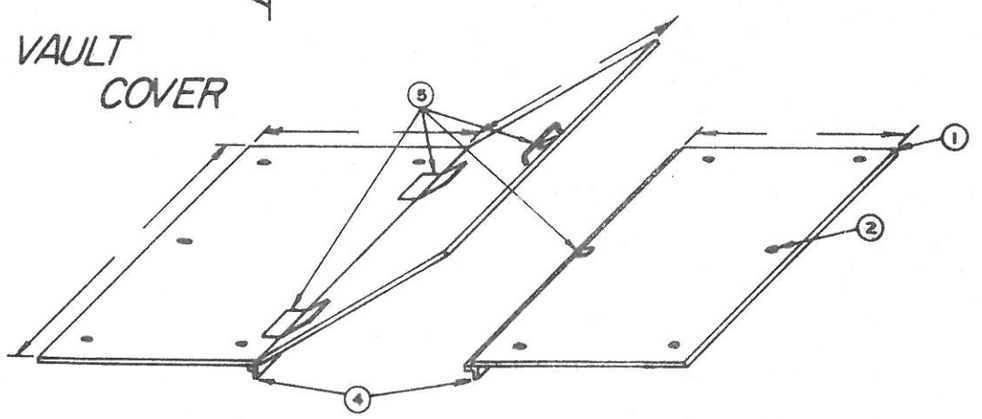

VAULT NOTES

1. 3/8" REBAR TO BE PLACED IN EACH SLOT.
2. COVER FASTENER (10 PLACES TYPICAL)
3. PLACE 1/8" VINYL SHEET PLASTIC ON ALL OUTSIDE WALLS FOR WATERPROOFING.
4. MORTAR AND REBAR SHOULD BE FLUSH WITH TOP OF VAULT.

COVER NOTES

1. COVER CONSTRUCTED OF 3 SECTIONS DIAMOND PLATE.
2. 5/8" DRILLED HOLES FOR FASTENERS
3. 3/8" x 3" COVER FASTENER & WASHER. PLACED IN UN-SET MORTAR.
4. 1/4" x 2" x 2" ANGLE IRON. EQUAL IN LENGTH TO WIDTH OF COVER.
5. HINGES, LATCH, & HANDLE PLACE AS INDICATED.

S-16

STANDARD SPECIFICATION

STANDARD VAULT AND COVER				
DRAWN:	APPROVED:	DATE:	SCALE:	

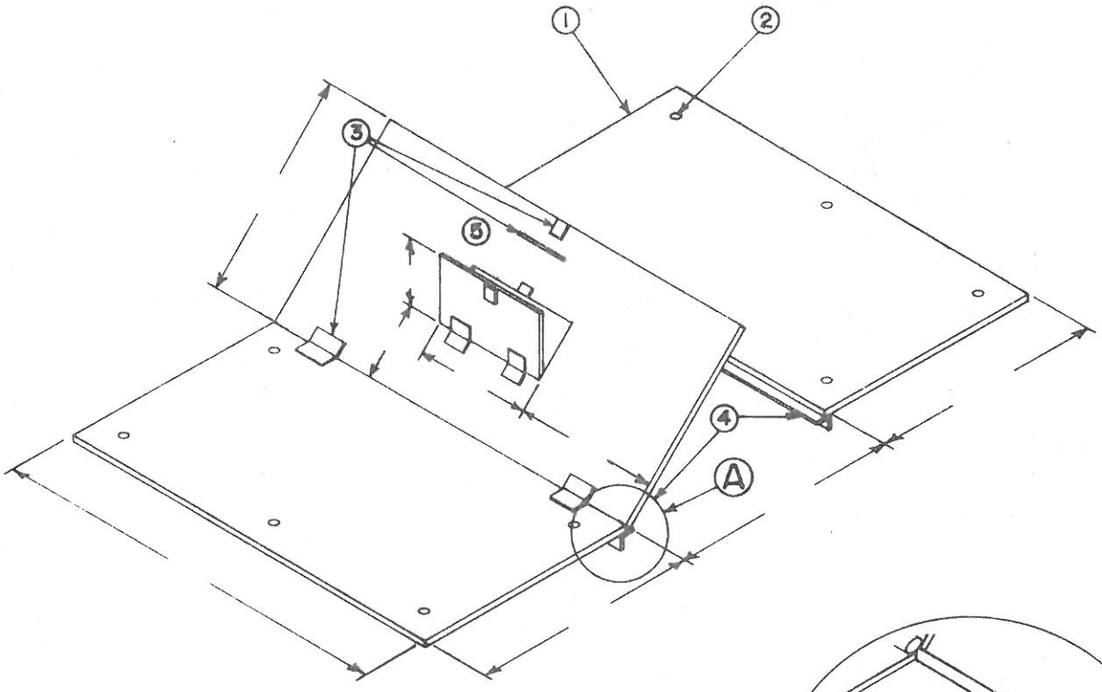

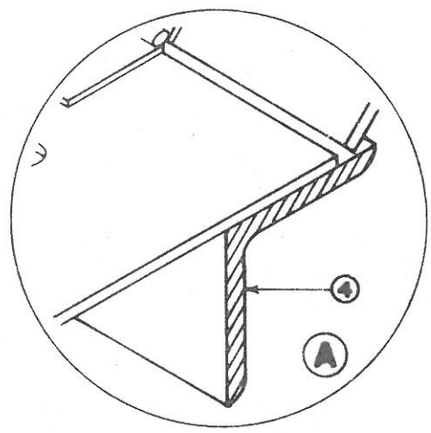

NOTES:

1. COVER CONSTRUCTED OF 3 SECTIONS " DIAMOND PLATE.
2. 5/8" DRILLED HOLES FOR FASTENERS.
3. PLACE HINGES, LATCHES, & HANDLE AS SHOWN.
4. 1/4"x2"x2" ANGLE IRON. EQUAL IN LENGTH TO WIDTH OF COVER AND INSTALLED TO SUPPORT LID (SEE DETAIL A).
5. INSPECTION PLATE, SAME SIZE AS METER COVER OR AS DIMENSIONED ABOVE.

STANDARD SPECIFICATION FOR: S-16A

OPTIONAL VAULT COVER WITH INSPECTION PLATE

DRAWN: L.N.B.	APPROVED: T.D.B.	DATE: 1/2/73	SCALE: NONE	

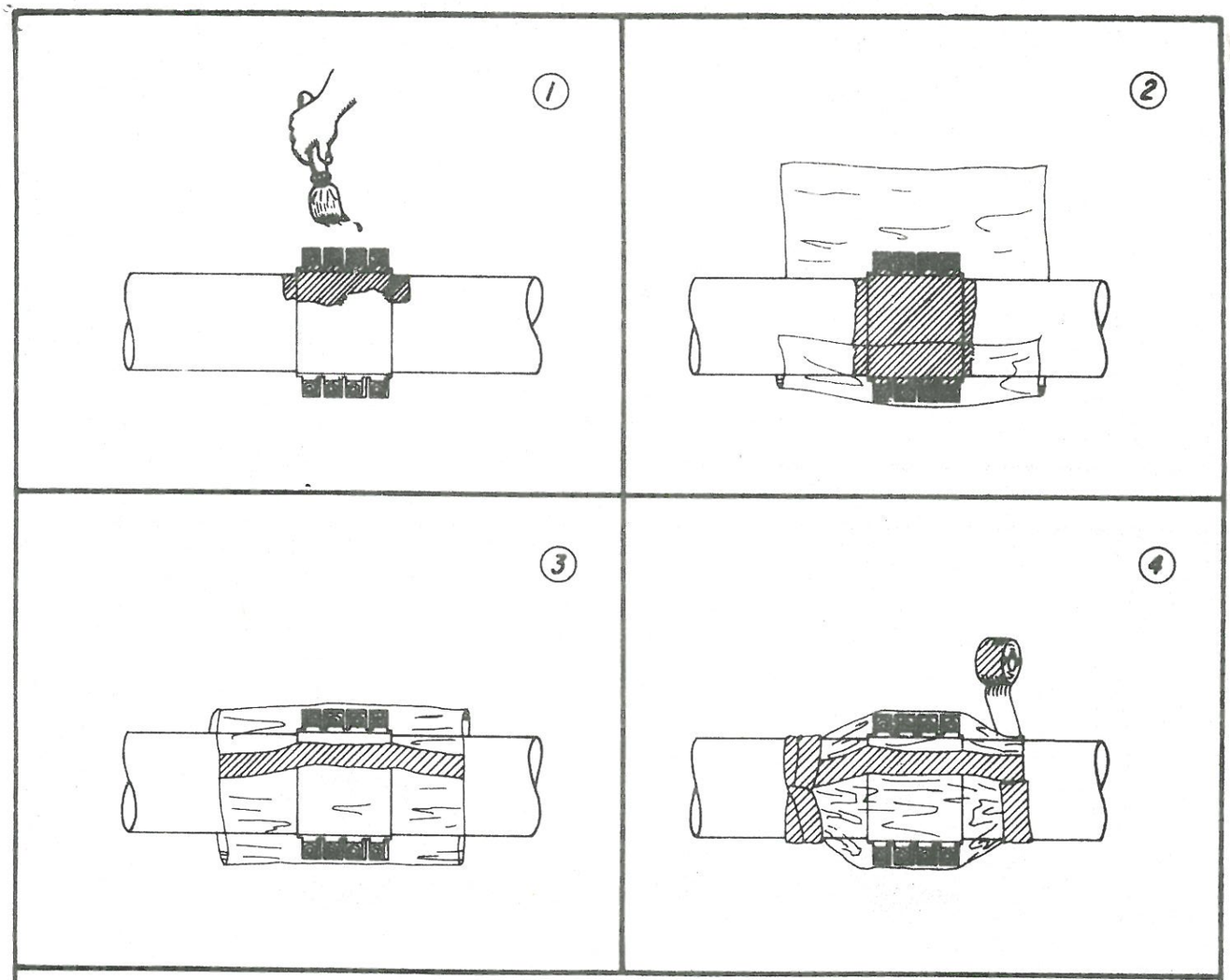

PROCEDURE

1. COAT FULL-CIRCLE LEAK CLAMP AND ADJACENT PIPE WITH HIGH-BUILD COAL-TAR ENAMEL, 8-10 MIL DRY THICKNESS.
2. LAY 0.02" VINYL UNDER PIPE AND CLAMP.
3. WRAP VINYL AROUND CLAMP AND TAPE SEAM WITH 2" VINYL TAPE.
4. GATHER ENDS OF VINYL AND WRAP WITH 2" VINYL TAPE TO FORM WATERPROOF SEAL.
5. PLACE BACKFILL CAREFULLY SO AS NOT TO PUNCTURE VINYL WRAPPING.

STANDARD SPECIFICATION FOR: S-17

FULL-CIRCLE LEAK CLAMP PROTECTION

DRAWN: L.M.B.	APPROVED: L L M	DATE: 10-15-73	SCALE: 1" = 1'	

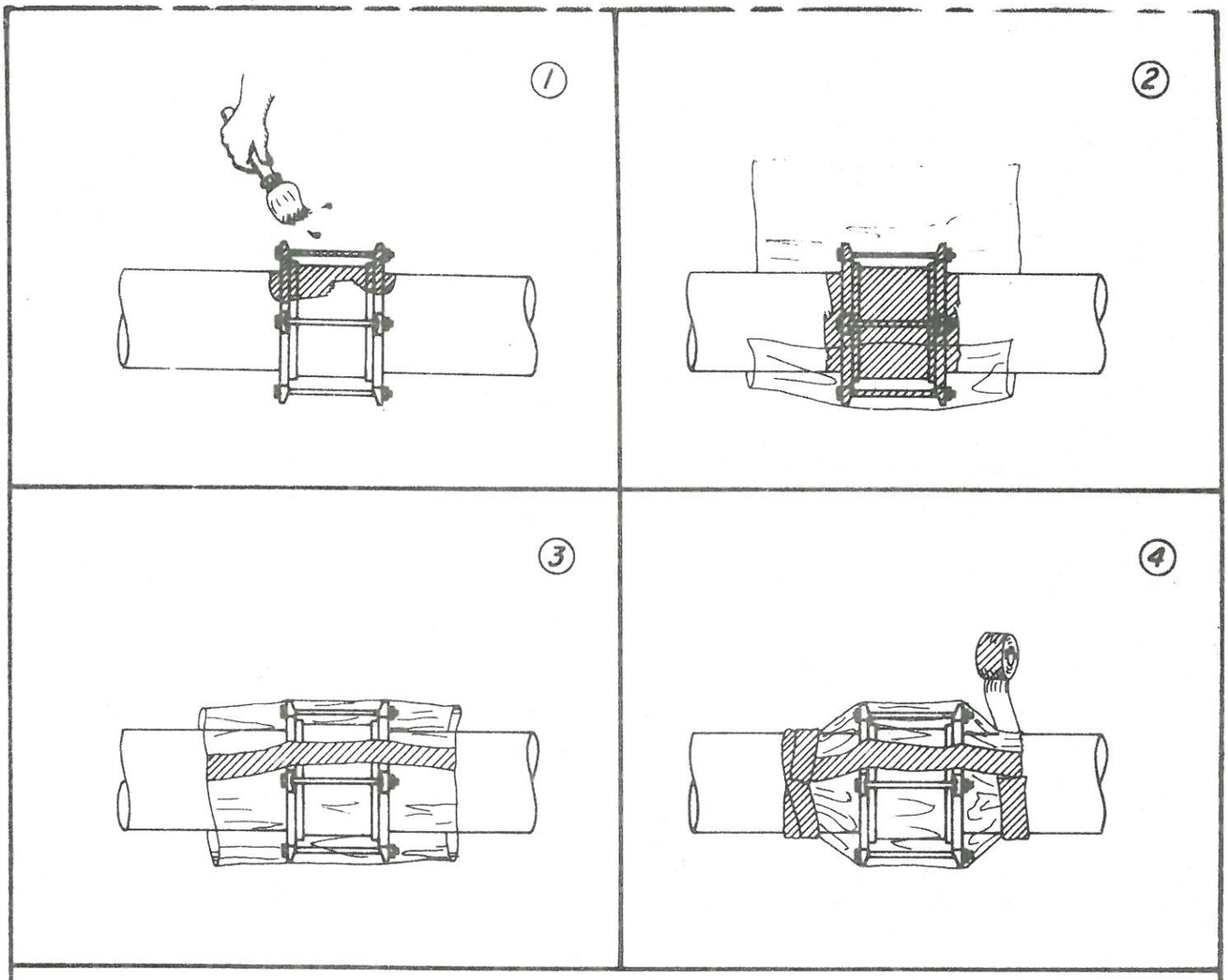

PROCEDURE

1. COAT COMPRESSION COUPLING AND ADJACENT PIPE WITH HIGH-BUILD COAL-TAR ENAMEL, 8-10 MIL DRY THICKNESS.
2. LAY 0.02" VINYL UNDER PIPE AND COUPLING.
3. WRAP VINYL AROUND COUPLING AND TAPE SEAM WITH 2" VINYL TAPE.
4. GATHER ENDS OF VINYL AND WRAP WITH 2" VINYL TAPE TO FORM WATERPROOF SEAL.
5. PLACE BACKFILL CAREFULLY SO AS NOT TO PUNCTURE VINYL WRAPPING.

STANDARD SPECIFICATION FOR: S-17A

COMPRESSION COUPLING PROTECTION

DRAWN: L.M.B.	APPROVED:	DATE: 10/9/73	SCALE: 1" = 1'	

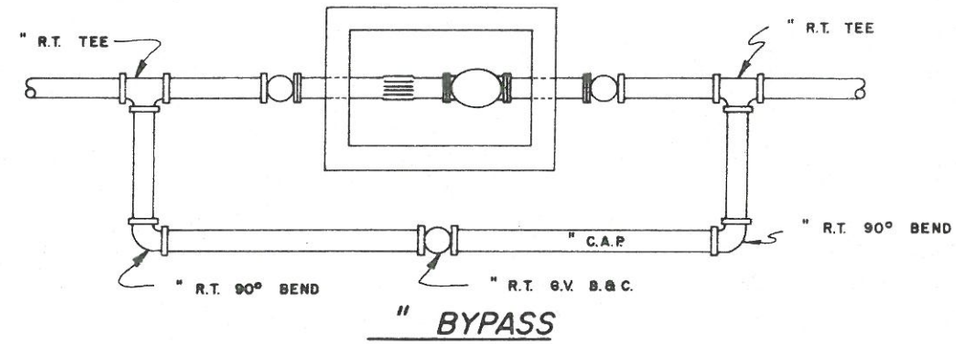

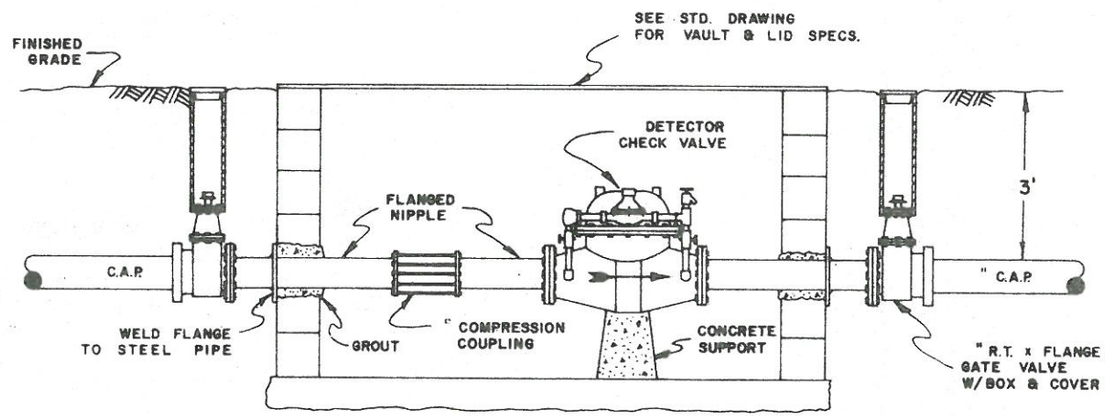

NOTE:

COAT ALL STEEL FITTINGS BELOW GROUND WITH COAL TAR ENAMEL AND WRAP IN VINYL.

STANDARD SPECIFICATION FOR:

DETECTOR CHECK VALVE

S-18

DRAWN: BG | APPROVED: | DATE: 5/22/74 | SCALE: NONE

EXHIBIT "B"

GENERAL CONDITIONS

1. Definitions
2. Additional Instructions and Detail Drawings
3. Schedules, Reports and Records
4. Drawings and Specifications
5. Shop Drawings
6. Materials, Services and Facilities
7. Inspection and Testing
8. Substitutions
9. Patents
10. Surveys, Permits, Regulations
11. Protection of Work, Property, Persons
12. Supervision by Contractor
13. Changes in the Work
14. Changes in Contract Price
15. Time for Completion and Liquidated Damages
16. Correction of Work
17. Subsurface Conditions
18. Suspension of Work, Termination and Delay
19. Payments to Contractor
20. Acceptance of Final Payment as Release
21. Insurance
22. Contract Security
23. Assignments
24. Indemnification
25. Separate Contracts
26. Subcontracting
27. Engineer's Authority
28. Land and Rights-of-Way
29. Guaranty
30. Arbitration
31. Taxes

1. *DEFINITIONS*

1.1 Wherever used in the CONTRACT DOCUMENTS, the following terms shall have the meanings indicated which shall be applicable to both the singular and plural thereof:

1.2 ADDENDA – Written or graphic instruments issued prior to the execution of the Agreement which modify or interpret the CONTRACT DOCUMENTS, DRAWINGS and SPECIFICATIONS, by additions, deletions, clarifications or corrections.

1.3 BID – The offer or proposal of the BIDDER submitted on the prescribed form setting forth the prices for the WORK to be performed.

1.4 BIDDER – Any person, firm or corporation submitting a BID for the WORK.

1.5 BONDS – Bid, Performance, and Payment Bonds and other instruments of security, furnished by the CONTRACTOR and his surety in accordance with the CONTRACT DOCUMENTS.

1.6 CHANGE ORDER – A written order to the CONTRACTOR authorizing an addition, deletion or revision in the WORK within the general scope of the CONTRACT DOCUMENTS, or authorizing an adjustment in the CONTRACT PRICE or CONTRACT TIME.

1.7 CONTRACT DOCUMENTS – The contract, including Advertisement For Bids, Information For Bidders, BID, Bid Bond, Agreement, Payment Bond, Performance Bond, NOTICE OF AWARD, NOTICE TO PROCEED, CHANGE ORDER, DRAWINGS, SPECIFICATIONS, and ADDENDA.

1.8 CONTRACT PRICE – The total monies payable to the CONTRACTOR under the terms and conditions of the CONTRACT DOCUMENTS.

1.9 CONTRACT TIME – The number of calendar days stated in the CONTRACT DOCUMENTS for the completion of the WORK.

1.10 CONTRACTOR – The person, firm or corporation with whom the OWNER has executed the Agreement.

1.11 DRAWINGS – The part of the CONTRACT DOCUMENTS which show the characteristics and scope of the WORK to be performed and which have been prepared or approved by the ENGINEER.

1.12 ENGINEER – The person, firm or corporation named as such in the CONTRACT DOCUMENTS.

1.13 FIELD ORDER – A written order effecting a change in the WORK not involving an adjustment in the CONTRACT PRICE or an extension of the CONTRACT TIME, issued by the ENGINEER to the CONTRACTOR during construction

1.14 NOTICE OF AWARD – The written notice of the acceptance of the BID from the OWNER to the successful BIDDER.

1.15 NOTICE TO PROCEED – Written communication issued by the OWNER to the CONTRACTOR authorizing him to proceed with the WORK and establishing the date of commencement of the WORK.

1.16 OWNER – A public or quasi-public body or authority, corporation, association, partnership, or individual for whom the WORK is to be performed.

1.17 PROJECT – The undertaking to be performed as provided in the CONTRACT DOCUMENTS.

1.18 RESIDENT PROJECT REPRESENTATIVE – The authorized representative of the OWNER who is assigned to the PROJECT site or any part thereof.

1.19 SHOP DRAWINGS – All drawings, diagrams, illustrations, brochures, schedules and other data which are prepared by the CONTRACTOR, a SUBCONTRACTOR, manufacturer, SUPPLIER or distributor, which illustrate how specific portions of the WORK shall be fabricated or installed.

1.20 SPECIFICATIONS – A part of the CONTRACT DOCUMENTS consisting of written descriptions of a technical nature of materials, equipment, construction systems, standards and workmanship.

1.21 SUBCONTRACTOR – An individual, firm or corporation having a direct contract with the CONTRACTOR or with any other SUBCONTRACTOR for the performance of a part of the WORK at the site.

1.22 SUBSTANTIAL COMPLETION – That date as certified by the ENGINEER when the construction of the PROJECT or a specified part thereof is sufficiently completed, in accordance with the CONTRACT DOCUMENTS, so that the PROJECT or specified part can be utilized for the purposes for which it is intended.

1.23 SUPPLEMENTAL GENERAL CONDITIONS –

Modifications to General Conditions required by a Federal agency for participation in the PROJECT and approved by the agency in writing prior to inclusion in the CONTRACT DOCUMENTS, or such requirements that may be imposed by applicable state laws.

1.24 SUPPLIER – Any person or organization who supplies materials or equipment for the WORK, including that fabricated to a special design, but who does not perform labor at the site.

1.25 WORK – All labor necessary to produce the construction required by the CONTRACT DOCUMENTS, and all materials and equipment incorporated or to be incorporated in the PROJECT.

1.26 WRITTEN NOTICE – Any notice to any party of the Agreement relative to any part of this Agreement in writing and considered delivered and the service thereof completed, when posted by certified or registered mail to the said party at his last given address, or delivered in person to said party or his authorized representative on the WORK.

2. *ADDITIONAL INSTRUCTIONS AND DETAIL DRAWINGS*

2.1 The CONTRACTOR may be furnished additional instructions and detail drawings, by the ENGINEER, as necessary to carry out the WORK required by the CONTRACT DOCUMENTS.

2.2 The additional drawings and instruction thus supplied will become a part of the CONTRACT DOCUMENTS. The CONTRACTOR shall carry out the WORK in accordance with the additional detail drawings and instructions.

3. *SCHEDULES, REPORTS AND RECORDS*

3.1 The CONTRACTOR shall submit to the OWNER such schedule of quantities and costs, progress schedules, payrolls, reports, estimates, records and other data where applicable as are required by the CONTRACT DOCUMENTS for the WORK to be performed.

3.2 Prior to the first partial payment estimate the CONTRACTOR shall submit construction progress schedules showing the order in which he proposes to carry on the WORK, including dates at which he will start the various parts of the WORK, estimated date of completion of each part and, as applicable:

3.2.1. The dates at which special detail drawings will be required; and

3.2.2 Respective dates for submission of SHOP DRAWINGS, the beginning of manufacture, the testing and the installation of materials, supplies and equipment.

3.3 The CONTRACTOR shall also submit a schedule of payments that he anticipates he will earn during the course of the WORK.

4. *DRAWINGS AND SPECIFICATIONS*

4.1 The intent of the DRAWINGS and SPECIFICATIONS is that the CONTRACTOR shall furnish all labor, materials, tools, equipment, and transportation necessary for the proper execution of the WORK in accordance with the CONTRACT DOCUMENTS and all incidental work necessary to complete the PROJECT in an acceptable manner, ready for use, occupancy or operation by the OWNER.

4.2 In case of conflict between the DRAWINGS and SPECIFICATIONS, the SPECIFICATIONS shall govern. Figure dimensions on DRAWINGS shall govern over scale dimensions, and detailed DRAWINGS shall govern over general DRAWINGS.

4.3 Any discrepancies found between the DRAWINGS and SPECIFICATIONS and site conditions or any inconsistencies or ambiguities in the DRAWINGS or SPECIFICATIONS shall be immediately reported to the ENGINEER, in writing, who shall promptly correct such inconsistencies or ambiguities in writing. WORK done by the CONTRACTOR after his discovery of such discrepancies, inconsistencies or ambiguities shall be done at the CONTRACTOR'S risk.

5. *SHOP DRAWINGS*

5.1 The CONTRACTOR shall provide SHOP DRAWINGS as may be necessary for the prosecution of the WORK as required by the CONTRACT DOCUMENTS. The ENGINEER shall promptly review all SHOP DRAWINGS. The ENGINEER'S approval of any SHOP DRAWING shall not release the CONTRACTOR from responsibility for deviations from the CONTRACT DOCUMENTS. The approval of any SHOP DRAWING which substantially deviates from the requirement of the CONTRACT DOCUMENTS shall be evidenced by a CHANGE ORDER.

5.2 When submitted for the ENGINEER'S review, SHOP DRAWINGS shall bear the CONTRACTOR'S certification that he has reviewed, checked and approved the SHOP DRAWINGS and that they are in conformance with the requirements of the CONTRACT DOCUMENTS.

5.3 Portions of the WORK requiring a SHOP DRAWING or sample submission shall not begin until the SHOP DRAWING or submission has been approved by the ENGINEER. A copy of each approved SHOP DRAWING and each approved sample shall be kept in good order by the CONTRACTOR at the site and shall be available to the ENGINEER.

6. *MATERIALS, SERVICES AND FACILITIES*

6.1 It is understood that, except as otherwise specifically stated in the CONTRACT DOCUMENTS, the CONTRACTOR shall provide and pay for all materials, labor, tools, equipment, water, light, power, transportation, supervision, temporary construction of any nature, and all other services and facilities of any nature whatsoever necessary to execute, complete, and deliver the WORK within the specified time.

6.2 Materials and equipment shall be so stored as to insure the preservation of their quality and fitness for the WORK. Stored materials and equipment to be incorporated in the WORK shall be located so as to facilitate prompt inspection.

6.3 Manufactured articles, materials and equipment shall be applied, installed, connected, erected, used, cleaned and conditioned as directed by the manufacturer.

6.4 Materials, supplies and equipment shall be in accordance with samples submitted by the CONTRACTOR and approved by the ENGINEER.

6.5 Materials, supplies or equipment to be incorporated into the WORK shall not be purchased by the

CONTRACTOR or the SUBCONTRACTOR subject to a chattel mortgage or under a conditional sale contract or other agreement by which an interest is retained by the seller.

7. *INSPECTION AND TESTING*

7.1 All materials and equipment used in the construction of the PROJECT shall be subject to adequate inspection and testing in accordance with generally accepted standards, as required and defined in the CONTRACT DOCUMENTS.

7.2 The OWNER shall provide all inspection and testing services not required by the CONTRACT DOCUMENTS.

7.3 The CONTRACTOR shall provide at his expense the testing and inspection services required by the CONTRACT DOCUMENTS.

7.4 If the CONTRACT DOCUMENTS, laws, ordinances, rules, regulations or orders of any public authority having jurisdiction require any WORK to specifically be inspected, tested, or approved by someone other than the CONTRACTOR, the CONTRACTOR will give the ENGINEER timely notice of readiness. The CONTRACTOR will then furnish the ENGINEER the required certificates of inspection, testing or approval.

7.5 Inspections, tests or approvals by the engineer or others shall not relieve the CONTRACTOR from his obligations to perform the WORK in accordance with the requirements of the CONTRACT DOCUMENTS.

7.6 The ENGINEER and his representatives will at all times have access to the WORK. In addition, authorized representatives and agents of any participating Federal or state agency shall be permitted to inspect all work, materials, payrolls, records of personnel, invoices of materials, and other relevant data and records. The CONTRACTOR will provide proper facilities for such access and observation of the WORK and also for any inspection, or testing thereof.

7.7 If any WORK is covered contrary to the written instructions of the ENGINEER it must, if requested by the ENGINEER, be uncovered for his observation and replaced at the CONTRACTOR'S expense.

7.8 If the ENGINEER considers it necessary or advisable that covered WORK be inspected or tested by others, the CONTRACTOR, at the ENGINEER'S request, will uncover, expose or otherwise make available for observation, inspection or testing as the ENGINEER may require, that portion of the WORK in question, furnishing all necessary labor, materials, tools, and equipment. If it is found that such WORK is defective, the CONTRACTOR will bear all the expenses of such uncovering, exposure, observation, inspection and testing and of satisfactory reconstruction. If, however, such WORK is not found to be defective, the CONTRACTOR will be allowed an increase in the CONTRACT PRICE or an extension of the CONTRACT TIME, or both, directly attributable to such uncovering, exposure, observation, inspection, testing and reconstruction and an appropriate CHANGE ORDER shall be issued.

8. *SUBSTITUTIONS*

8.1 Whenever a material, article or piece of equipment is identified on the DRAWINGS or SPECIFICATIONS by reference to brand name or catalogue number, it shall be understood that this is referenced for the purpose of defining the performance or other salient requirements and that other products of equal capacities, quality and function shall be considered. The CONTRACTOR may recommend the substitution of a material, article, or piece of equipment of equal substance and function for those referred to in the CONTRACT DOCUMENTS by reference to brand name or catalogue number, and if, in the opinion of the ENGINEER, such material, article, or piece of equipment is of equal substance and function to that specified, the ENGINEER may approve its substitution and use by the CONTRACTOR. Any cost differential shall be deductible from the CONTRACT PRICE and the CONTRACT DOCUMENTS shall be appropriately modified by CHANGE ORDER. The CONTRACTOR warrants that if substitutes are approved, no major changes in the function or general design of the PROJECT will result. Incidental changes or extra component parts required to accommodate the substitute will be made by the CONTRACTOR without a change in the CONTRACT PRICE or CONTRACT TIME.

9. *PATENTS*

9.1 The CONTRACTOR shall pay all applicable royalties and license fees. He shall defend all suits or claims for infringement of any patent rights and save the OWNER harmless from loss on account thereof, except that the OWNER shall be responsible for any such loss when a particular process, design, or the product of a particular manufacturer or manufacturers is specified, however if the CONTRACTOR has reason to believe that the design, process or product specified is an infringement of a patent, he shall be responsible for such loss unless he promptly gives such information to the ENGINEER.

10. *SURVEYS, PERMITS, REGULATIONS*

10.1 The OWNER shall furnish all boundary surveys and establish all base lines for locating the principal component parts of the WORK together with a suitable number of bench marks adjacent to the WORK as shown in the CONTRACT DOCUMENTS. From the information provided by the OWNER, unless otherwise specified in the CONTRACT DOCUMENTS, the CONTRACTOR shall develop and make all detail surveys needed for construction such as slope stakes, batter boards, stakes for pile locations and other working points, lines, elevations and cut sheets.

10.2 The CONTRACTOR shall carefully preserve bench marks, reference points and stakes and, in case of willful or careless destruction, he shall be charged with the resulting expense and shall be responsible for any mistakes that may be caused by their unnecessary loss or disturbance.

10.3 Permits and licenses of a temporary nature necessary for the prosecution of the WORK shall be secured and paid for by the CONTRACTOR unless otherwise stated in the SUPPLEMENTAL GENERAL CONDITIONS. Permits, licenses and easements for permanent structures or permanent changes in existing facilities shall be secured and paid for by the OWNER, unless otherwise specified. The CONTRACTOR shall give all notices and comply with all laws, ordinances, rules and regulations bearing on the conduct of the WORK as drawn and specified. If the CONTRACTOR

observes that the CONTRACT DOCUMENTS are at variance therewith, he shall promptly notify the ENGINEER in writing, and any necessary changes shall be adjusted as provided in Section 13, CHANGES IN THE WORK.

11. *PROTECTION OF WORK, PROPERTY AND PERSONS*

11.1 The CONTRACTOR will be responsible for initiating, maintaining and supervising all safety precautions and programs in connection with the WORK. He will take all necessary precautions for the safety of, and will provide the necessary protection to prevent damage, injury or loss to all employees on the WORK and other persons who may be affected thereby, all the WORK and all materials or equipment to be incorporated therein, whether in storage on or off the site, and other property at the site or adjacent thereto, including trees, shrubs, lawns, walks, pavements, roadways, structures and utilities not designated for removal, relocation or replacement in the course of construction.

11.2 The CONTRACTOR will comply with all applicable laws, ordinances, rules, regulations and orders of any public body having jurisdiction. He will erect and maintain, as required by the conditions and progress of the WORK, all necessary safeguards for safety and protection. He will notify owners of adjacent utilities when prosecution of the WORK may affect them. The CONTRACTOR will remedy all damage, injury or loss to any property caused, directly or indirectly, in whole or in part, by the CONTRACTOR, any SUBCONTRACTOR or anyone directly or indirectly employed by any of them or anyone for whose acts any of them be liable, except damage or loss attributable to the fault of the CONTRACT DOCUMENTS or to the acts or omissions of the OWNER or the ENGINEER or anyone employed by either of them or anyone for whose acts either of them may be liable, and not attributable, directly or indirectly, in whole or in part, to the fault or negligence of the CONTRACTOR.

11.3 In emergencies affecting the safety of persons or the WORK or property at the site or adjacent thereto, the CONTRACTOR, without special instruction or authorization from the ENGINEER or OWNER, shall act to prevent threatened damage, injury or loss. He will give the ENGINEER prompt WRITTEN NOTICE of any significant changes in the WORK or deviations from the CONTRACT DOCUMENTS caused thereby, and a CHANGE ORDER shall thereupon be issued covering the changes and deviations involved.

12. *SUPERVISION BY CONTRACTOR*

12.1 The CONTRACTOR will supervise and direct the WORK. He will be solely responsible for the means, methods, techniques, sequences and procedures of construction. The CONTRACTOR will employ and maintain on the WORK a qualified supervisor or superintendent who shall have been designated in writing by the CONTRACTOR as the CONTRACTOR'S representative at the site. The supervisor shall have full authority to act on behalf of the CONTRACTOR and all communications given to the supervisor shall be as binding as if given to the CONTRACTOR. The supervisor shall be present on the site at all times as required to perform adequate supervision and coordination of the WORK.

13. *CHANGES IN THE WORK*

13.1 The OWNER may at any time, as the need arises, order changes within the scope of the WORK without invalidating the Agreement. If such changes increase or decrease the amount due under the CONTRACT DOCUMENTS, or in the time required for performance of the WORK, an equitable adjustment shall be authorized by CHANGE ORDER.

13.2 The ENGINEER, also, may at any time, by issuing a FIELD ORDER, make changes in the details of the WORK. The CONTRACTOR shall proceed with the performance of any changes in the WORK so ordered by the ENGINEER unless the CONTRACTOR believes that such FIELD ORDER entitles him to a change in CONTRACT PRICE or TIME, or both, in which event he shall give the ENGINEER WRITTEN NOTICE thereof within seven (7) days after the receipt of the ordered change. Thereafter the CONTRACTOR shall document the basis for the change in CONTRACT PRICE or TIME within thirty (30) days. The CONTRACTOR shall not execute such changes pending the receipt of an executed CHANGE ORDER or further instruction from the OWNER.

14. *CHANGES IN CONTRACT PRICE*

14.1 The CONTRACT PRICE may be changed only by a CHANGE ORDER. The value of any WORK covered by a CHANGE ORDER or of any claim for increase or decrease in the CONTRACT PRICE shall be determined by one or more of the following methods in the order of precedence listed below:

(a) Unit prices previously approved.

(b) An agreed lump sum.

(c) The actual cost for labor, direct overhead, materials, supplies, equipment, and other services necessary to complete the work. In addition there shall be added an amount to be agreed upon but not to exceed fifteen (15) percent of the actual cost of the WORK to cover the cost of general overhead and profit.

15. *TIME FOR COMPLETION AND LIQUIDATED DAMAGES*

15.1 The date of beginning and the time for completion of the WORK are essential conditions of the CONTRACT DOCUMENTS and the WORK embraced shall be commenced on a date specified in the NOTICE TO PROCEED.

15.2 The CONTRACTOR will proceed with the WORK at such rate of progress to insure full completion within the CONTRACT TIME. It is expressly understood and agreed, by and between the CONTRACTOR and the OWNER, that the CONTRACT TIME for the completion of the WORK described herein is a reasonable time, taking into consideration the average climatic and economic conditions and other factors prevailing in the locality of the WORK.

15.3 If the CONTRACTOR shall fail to complete the WORK within the CONTRACT TIME, or extension of time granted by the OWNER, then the CONTRACTOR will pay to the OWNER the amount for liquidated damages as specified in the BID for each calendar day that the CONTRACTOR shall be in default after the time stipulated in the CONTRACT DOCUMENTS.

15.4 The CONTRACTOR shall not be charged with liquidated damages or any excess cost when the delay in completion of the WORK is due to the following, and the CONTRACTOR has promptly given WRITTEN NOTICE of such delay to the OWNER or ENGINEER.

15.4.1 To any preference, priority or allocation

order duly issued by the OWNER.

15.4.2 To unforeseeable causes beyond the control and without the fault or negligence of the CONTRACTOR, including but not restricted to, acts of God, or of the public enemy, acts of the OWNER, acts of another CONTRACTOR in the performance of a contract with the OWNER, fires, floods, epidemics, quarantine restrictions, strikes, freight embargoes, and abnormal and unforeseeable weather; and

15.4.3 To any delays of SUBCONTRACTORS occasioned by any of the causes specified in paragraphs 15.4.1 and 15.4.2 of this article.

16. *CORRECTION OF WORK*

16.1 The CONTRACTOR shall promptly remove from the premises all WORK rejected by the ENGINEER for failure to comply with the CONTRACT DOCUMENTS, whether incorporated in the construction or not, and the CONTRACTOR shall promptly replace and re-execute the WORK in accordance with the CONTRACT DOCUMENTS and without expense to the OWNER and shall bear the expense of making good all WORK of other CONTRACTORS destroyed or damaged by such removal or replacement.

16.2 All removal and replacement WORK shall be done at the CONTRACTOR'S expense. If the CONTRACTOR does not take action to remove such rejected WORK within ten (10) days after receipt of WRITTEN NOTICE, the OWNER may remove such WORK and store the materials at the expense of the CONTRACTOR.

17. *SUBSURFACE CONDITIONS*

17.1 The CONTRACTOR shall promptly, and before such conditions are disturbed, except in the event of an emergency, notify the OWNER by WRITTEN NOTICE of:

17.1.1 Subsurface or latent physical conditions at the site differing materially from those indicated in the CONTRACT DOCUMENTS; or

17.1.2 Unknown physical conditions at the site, of an unusual nature, differing materially from those ordinarily encountered and generally recognized as inherent in WORK of the character provided for in the CONTRACT DOCUMENTS.

17.2 The OWNER shall promptly investigate the conditions, and if he finds that such conditions do so materially differ and cause an increase or decrease in the cost of, or in the time required for, performance of the WORK, an equitable adjustment shall be made and the CONTRACT DOCUMENTS shall be modified by a CHANGE ORDER. Any claim of the CONTRACTOR for adjustment hereunder shall not be allowed unless he has given the required WRITTEN NOTICE; provided that the OWNER may, if he determines the facts so justify, consider and adjust any such claims asserted before the date of final payment.

18. *SUSPENSION OF WORK, TERMINATION AND DELAY*

18.1 The OWNER may suspend the WORK or any portion thereof for a period of not more than ninety days or such further time as agreed upon by the CONTRACTOR, by WRITTEN NOTICE to the CONTRACTOR and the ENGINEER which notice shall fix the date on which WORK shall be resumed. The CONTRACTOR will resume that WORK on the date so fixed. The CONTRACTOR will be allowed an increase in the CONTRACT PRICE or an extension of the CONTRACT TIME, or both, directly attributable to any suspension.

18.2 If the CONTRACTOR is adjudged a bankrupt or insolvent, or if he makes a general assignment for the benefit of his creditors, or if a trustee or receiver is appointed for the CONTRACTOR or for any of his property, or if he files a petition to take advantage of any debtor's act, or to reorganize under the bankruptcy or applicable laws, or if he repeatedly fails to supply sufficient skilled workmen or suitable materials or equipment, or if he repeatedly fails to make prompt payments to SUBCONTRACTORS or for labor, materials or equipment or if he disregards laws, ordinances, rules, regulations or orders of any public body having jurisdiction of the WORK or if he disregards the authority of the ENGINEER, or if he otherwise violates any provision of the CONTRACT DOCUMENTS, then the OWNER may, without prejudice to any other right or remedy and after giving the CONTRACTOR and his surety a minimum of ten (10) days from delivery of a WRITTEN NOTICE, terminate the services of the CONTRACTOR and take possession of the PROJECT and of all materials, equipment, tools, construction equipment and machinery thereon owned by the CONTRACTOR, and finish the WORK by whatever method he may deem expedient. In such case the CONTRACTOR shall not be entitled to receive any further payment until the WORK is finished. If the unpaid balance of the CONTRACT PRICE exceeds the direct and indirect costs of completing the PROJECT, including compensation for additional professional services, such excess SHALL BE PAID TO THE CONTRACTOR. If such costs exceed such unpaid balance, the CONTRACTOR will pay the difference to the OWNER. Such costs incurred by the OWNER will be determined by the ENGINEER and incorporated in a CHANGE ORDER.

18.3 Where the CONTRACTOR'S services have been so terminated by the OWNER, said termination shall not affect any right of the OWNER against the CONTRACTOR then existing or which may thereafter accrue. Any retention or payment of monies by the OWNER due the CONTRACTOR will not release the CONTRACTOR from compliance with the CONTRACT DOCUMENTS.

18.4 After ten (10) days from delivery of a WRITTEN NOTICE to the CONTRACTOR and the ENGINEER, the OWNER may, without cause and without prejudice to any other right or remedy, elect to abandon the PROJECT and terminate the Contract. In such case, the CONTRACTOR shall be paid for all WORK executed and any expense sustained plus reasonable profit.

18.5 If, through no act or fault of the CONTRACTOR, the WORK is suspended for a period of more than ninety (90) days by the OWNER or under an order of court or other public authority, or the ENGINEER fails to act on any request for payment within thirty (30) days after it is submitted, or the OWNER fails to pay the CONTRACTOR substantially the sum approved by the ENGINEER or awarded by arbitrators within thirty (30) days of its approval and presentation, then the CONTRACTOR may, after ten (10) days from delivery of a WRITTEN NOTICE to the OWNER and the ENGINEER, terminate the CONTRACT and recover from the OWNER payment for all WORK exe-

cuted and all expenses sustained. In addition and in lieu of terminating the CONTRACT, if the ENGINEER has failed to act on a request for payment or if the OWNER has failed to make any payment as aforesaid, the CONTRACTOR may upon ten (10) days written notice to the OWNER and the ENGINEER stop the WORK until he has been paid all amounts then due, in which event and upon resumption of the WORK, CHANGE ORDERS shall be issued for adjusting the CONTRACT PRICE or extending the CONTRACT TIME or both to compensate for the costs and delays attributable to the stoppage of the WORK.

18.6 If the performance of all or any portion of the WORK is suspended, delayed, or interrupted as a result of a failure of the OWNER or ENGINEER to act within the time specified in the CONTRACT DOCUMENTS, or if no time is specified, within a reasonable time, an adjustment in the CONTRACT PRICE or an extension of the CONTRACT TIME, or both, shall be made by CHANGE ORDER to compensate the CONTRACTOR for the costs and delays necessarily caused by the failure of the OWNER or ENGINEER.

19. *PAYMENTS TO CONTRACTOR*

19.1 At least ten (10) days before each progress payment falls due (but not more often than once a month), the CONTRACTOR will submit to the ENGINEER a partial payment estimate filled out and signed by the CONTRACTOR covering the WORK performed during the period covered by the partial payment estimate and supported by such data as the ENGINEER may reasonably require. If payment is requested on the basis of materials and equipment not incorporated in the WORK but delivered and suitably stored at or near the site, the partial payment estimate shall also be accompanied by such supporting data, satisfactory to the OWNER, as will establish the OWNER's title to the material and equipment and protect his interest therein, including applicable insurance. The ENGINEER will, within ten (10) days after receipt of each partial payment estimate, either indicate in writing his approval of payment and present the partial payment estimate to the OWNER, or return the partial payment estimate to the CONTRACTOR indicating in writing his reasons for refusing to approve payment. In the latter case, the CONTRACTOR may make the necessary corrections and resubmit the partial payment estimate. The OWNER will, within ten (10) days of presentation to him of an approved partial payment estimate, pay the CONTRACTOR a progress payment on the basis of the approved partial payment estimate. The OWNER shall retain ten (10) percent of the amount of each payment until final completion and acceptance of all work covered by the CONTRACT DOCUMENTS. The OWNER at any time, however, after fifty (50) percent of the WORK has been completed, if he finds that satisfactory progress is being made, shall reduce retainage to five (5%) percent on the current and remaining estimates. When the WORK is substantially complete (operational or beneficial occupancy), the retained amount may be further reduced below five (5) percent to only that amount necessary to assure completion. On completion and acceptance of a part of the WORK on which the price is stated separately in the CONTRACT DOCUMENTS, payment may be made in full, including retained percentages, less authorized deductions.

19.2 The request for payment may also include an allowance for the cost of such major materials and equipment which are suitably stored either at or near the site.

19.3 Prior to SUBSTANTIAL COMPLETION, the OWNER, with the approval of the ENGINEER and with the concurrence of the CONTRACTOR, may use any completed or substantially completed portions of the WORK. Such use shall not constitute an acceptance of such portions of the WORK.

19.4 The OWNER shall have the right to enter the premises for the purpose of doing work not covered by the CONTRACT DOCUMENTS. This provision shall not be construed as relieving the CONTRACTOR of the sole responsibility for the care and protection of the WORK, or the restoration of any damaged WORK except such as may be caused by agents or employees of the OWNER.

19.5 Upon completion and acceptance of the WORK, the ENGINEER shall issue a certificate attached to the final payment request that the WORK has been accepted by him under the conditions of the CONTRACT DOCUMENTS. The entire balance found to be due the CONTRACTOR, including the retained percentages, but except such sums as may be lawfully retained by the OWNER, shall be paid to the CONTRACTOR within thirty (30) days of completion and acceptance of the WORK.

19.6 The CONTRACTOR will indemnify and save the OWNER or the OWNER'S agents harmless from all claims growing out of the lawful demands of SUBCONTRACTORS, laborers, workmen, mechanics, materialmen, and furnishers of machinery and parts thereof, equipment, tools, and all supplies, incurred in the furtherance of the performance of the WORK. The CONTRACTOR shall, at the OWNER'S request, furnish satisfactory evidence that all obligations of the nature designated above have been paid, discharged, or waived. If the CONTRACTOR fails to do so the OWNER may, after having notified the CONTRACTOR, either pay unpaid bills or withhold from the CONTRACTOR'S unpaid compensation a sum of money deemed reasonably sufficient to pay any and all such lawful claims until satisfactory evidence is furnished that all liabilities have been fully discharged whereupon payment to the CONTRACTOR shall be resumed, in accordance with the terms of the CONTRACT DOCUMENTS, but in no event shall the provisions of this sentence be construed to impose any obligations upon the OWNER to either the CONTRACTOR, his Surety, or any third party. In paying any unpaid bills of the CONTRACTOR, any payment so made by the OWNER shall be considered as a payment made under the CONTRACT DOCUMENTS by the OWNER to the CONTRACTOR and the OWNER shall not be liable to the CONTRACTOR for any such payments made in good faith.

19.7 If the OWNER fails to make payment thirty (30) days after approval by the ENGINEER, in addition to other remedies available to the CONTRACTOR, there shall be added to each such payment interest at the maximum legal rate commencing on the first day after said payment is due and continuing until the payment is received by the CONTRACTOR.

20. *ACCEPTANCE OF FINAL PAYMENT AS RELEASE*

20.1 The acceptance by the CONTRACTOR of final payment shall be and shall operate as a release to the OWNER of all claims and all liability to the CONTRACTOR other than claims in stated amounts as may be specifically excepted by the CONTRACTOR for all things done or furnished in connection with this WORK and for every act and neglect of the OWNER and others relating to or arising out of this WORK. Any payment, however, final or otherwise, shall not release the CONTRACTOR or his sureties from any obligations under the CONTRACT DOCUMENTS or the Performance BOND and Payment BONDS.

21. *INSURANCE*

21.1 The CONTRACTOR shall purchase and maintain such insurance as will protect him from claims set forth below which may arise out of or result from the CONTRACTOR'S execution of the WORK, whether such execution be by himself or by any SUBCONTRACTOR or by anyone directly or indirectly employed by any of them, or by anyone for whose acts any of them may be liable:

21.1.1 Claims under workmen's compensation, disability benefit and other similar employee benefit acts;

21.1.2 Claims for damages because of bodily injury, occupational sickness or disease, or death of his employees;

21.1.3 Claims for damages because of bodily injury, sickness or disease, or death of any person other than his employees;

21.1.4 Claims for damages insured by usual personal injury liability coverage which are sustained (1) by any person as a result of an offense directly or indirectly related to the employment of such person by the CONTRACTOR, or (2) by any other person; and

21.1.5 Claims for damages because of injury to or destruction of tangible property, including loss of use resulting therefrom.

21.2 Certificates of Insurance acceptable to the OWNER shall be filed with the OWNER prior to commencement of the WORK. These Certificates shall contain a provision that coverages afforded under the policies will not be cancelled unless at least fifteen (15) days prior WRITTEN NOTICE has been given to the OWNER.

21.3 The CONTRACTOR shall procure and maintain, at his own expense, during the CONTRACT TIME, liability insurance as hereinafter specified;

21.3.1 CONTRACTOR'S General Public Liability and Property Damage Insurance including vehicle coverage issued to the CONTRACTOR and protecting him from all claims for personal injury, including death, and all claims for destruction of or damage to property, arising out of or in connection with any operations under the CONTRACT DOCUMENTS, whether such operations be by himself or by any SUBCONTRACTOR under him, or anyone directly or indirectly employed by the CONTRACTOR or by a SUBCONTRACTOR under him. Insurance shall be written with a limit of liability of not less than $500,000 for all damages arising out of bodily injury, including death, at any time resulting therefrom, sustained by any one person in any one accident; and a limit of liability of not less than $500,000 aggregate for any such damages sustained by two or more persons in any one accident. Insurance shall be written with a limit of liability of not less than $200,000 for all property damage sustained by any one person in any one accident; and a limit of liability of not less than $200,000 aggregate for any such damage sustained by two or more persons in any one accident.

21.3.2 The CONTRACTOR shall acquire and maintain, if applicable, Fire and Extended Coverage insurance upon the PROJECT to the full insurable value thereof for the benefit of the OWNER, the CONTRACTOR, and SUBCONTRACTORS as their interest may appear. This provision shall in no way release the CONTRACTOR or CONTRACTOR'S surety from obligations under the CONTRACT DOCUMENTS to fully complete the PROJECT.

21.4 The CONTRACTOR shall procure and maintain, at his own expense, during the CONTRACT TIME, in accordance with the provisions of the laws of the state in which the work is performed, Workmen's Compensation Insurance including occupational disease provisions, for all of his employees at the site of the PROJECT and in case any work is sublet, the CONTRACTOR shall require such SUBCONTRACTOR similarly to provide Workmen's Compensation Insurance, including occupational disease provisions for all of the latter's employees unless such employees are covered by the protection afforded by the CONTRACTOR. In case any class of employees engaged in hazardous work under this contract at the site of the PROJECT is not protected under Workmen's Compensation statute, the CONTRACTOR shall provide, and shall cause each SUBCONTRACTOR to provide, adequate and suitable insurance for the protection of his employees not otherwise protected.

21.5 The CONTRACTOR shall secure, if applicable, "All Risk" type Builder's Risk Insurance for WORK to be performed. Unless specifically authorized by the OWNER, the amount of such insurance shall not be less than the CONTRACT PRICE totaled in the BID. The policy shall cover not less than the losses due to fire, explosion, hail, lightning, vandalism, malicious mischief, wind, collapse, riot, aircraft, and smoke during the CONTRACT TIME, and until the WORK is accepted by the OWNER. The policy shall name as the insured the CONTRACTOR, the ENGINEER, and the OWNER.

22. *CONTRACT SECURITY*

22.1 The CONTRACTOR shall within ten (10) days after the receipt of the NOTICE OF AWARD furnish the OWNER with a Performance Bond and a Payment Bond in penal sums equal to the amount of the CONTRACT PRICE, conditioned upon the performance by

the CONTRACTOR of all undertakings, covenants, terms, conditions and agreements of the CONTRACT DOCUMENTS, and upon the prompt payment by the CONTRACTOR to all persons supplying labor and materials in the prosecution of the WORK provided by the CONTRACT DOCUMENTS. Such BONDS shall be executed by the CONTRACTOR and a corporate bonding company licensed to transact such business in the state in which the WORK is to be performed and named on the current list of "Surety Companies Acceptable on Federal Bonds" as published in the Treasury Department Circular Number 570. The expense of these BONDS shall be borne by the CONTRACTOR. If at any time a surety on any such BOND is declared a bankrupt or loses its right to do business in the state in which the WORK is to be performed or is removed from the list of Surety Companies accepted on Federal BONDS, CONTRACTOR shall within ten (10) days after notice from the OWNER to do so, substitute an acceptable BOND (or BONDS) in such form and sum and signed by such other surety or sureties as may be satisfactory to the OWNER. The premiums on such BOND shall be paid by the CONTRACTOR. No further payments shall be deemed due nor shall be made until the new surety or sureties shall have furnished an acceptable BOND to the OWNER.

23. *ASSIGNMENTS*

23.1 Neither the CONTRACTOR nor the OWNER shall sell, transfer, assign or otherwise dispose of the Contract or any portion thereof, or of his right, title or interest therein, or his obligations thereunder, without written consent of the other party.

24. *INDEMNIFICATION*

24.1 The CONTRACTOR will indemnify and hold harmless the OWNER and the ENGINEER and their agents and employees from and against all claims, damages, losses and expenses including attorney's fees arising out of or resulting from the performance of the WORK, provided that any such claims, damage, loss or expense is attributable to bodily injury, sickness, disease or death, or to injury to or destruction of tangible property including the loss of use resulting therefrom; and is caused in whole or in part by any negligent or willful act or omission of the CONTRACTOR, and SUBCONTRACTOR, anyone directly or indirectly employed by any of them or anyone for whose acts any of them may be liable.

24.2 In any and all claims against the OWNER or the ENGINEER, or any of their agents or employees, by any employee of the CONTRACTOR, any SUBCONTRACTOR, anyone directly or indirectly employed by any of them, or anyone for whose acts any of them may be liable, the indemnification obligation shall not be limited in any way by any limitation on the amount or type of damages, compensation or benefits payable by or for the CONTRACTOR or any SUBCONTRACTOR under workmen's compensation acts, disability benefit acts or other employee benefits acts.

24.3 The obligation of the CONTRACTOR under this paragraph shall not extend to the liability of the ENGINEER, his agents or employees arising out of the preparation or approval of maps, DRAWINGS, opinions, reports, surveys, CHANGE ORDERS, designs or SPECIFICATIONS.

25. *SEPARATE CONTRACTS*

25.1 The OWNER reserves the right to let other contracts in connection with this PROJECT. The CONTRACTOR shall afford other CONTRACTORS reasonable opportunity for the introduction and storage of their materials and the execution of their WORK, and shall properly connect and coordinate his WORK with theirs. If the proper execution or results of any part of the CONTRACTOR'S WORK depends upon the WORK of any other CONTRACTOR, the CONTRACTOR shall inspect and promptly report to the ENGINEER any defects in such WORK that render it unsuitable for such proper execution and results.

25.2 The OWNER may perform additional WORK related to the PROJECT by himself, or he may let other contracts containing provisions similar to these. The CONTRACTOR will afford the other CONTRACTORS who are parties to such Contracts (or the OWNER, if he is performing the additional WORK himself), reasonable opportunity for the introduction and storage of materials and equipment and the execution of WORK, and shall properly connect and coordinate his WORK with theirs.

25.3 If the performance of additional WORK by other CONTRACTORS or the OWNER is not noted in the CONTRACT DOCUMENTS prior to the execution of the CONTRACT, written notice thereof shall be given to the CONTRACTOR prior to starting any such additional WORK. If the CONTRACTOR believes that the performance of such additional WORK by the OWNER or others involves him in additional expense or entitles him to an extension of the CONTRACT TIME, he may make a claim therefor as provided in Sections 14 and 15.

26. *SUBCONTRACTING*

26.1 The CONTRACTOR may utilize the services of specialty SUBCONTRACTORS on those parts of the WORK which, under normal contracting practices, are performed by specialty SUBCONTRACTORS.

26.2 The CONTRACTOR shall not award WORK to SUBCONTRACTOR(s) in excess of fifty (50%) percent of the CONTRACT PRICE, without prior written approval of the OWNER.

26.3 The CONTRACTOR shall be fully responsible to the OWNER for the acts and omissions of his SUBCONTRACTORS, and of persons either directly or indirectly employed by them, as he is for the acts and omissions of persons directly employed by him.

26.4 The CONTRACTOR shall cause appropriate provisions to be inserted in all subcontracts relative to the WORK to bind SUBCONTRACTORS to the CONTRACTOR by the terms of the CONTRACT DOCUMENTS insofar as applicable to the WORK of SUBCONTRACTORS and to give the CONTRACTOR the same power as regards terminating any subcontract that the OWNER may exercise over the CONTRACTOR under any provision of the CONTRACT DOCUMENTS.

26.5 Nothing contained in this CONTRACT shall create any contractual relation between any SUBCONTRACTOR and the OWNER.

27. *ENGINEER'S AUTHORITY*

27.1 The ENGINEER shall act as the OWNER'S representative during the construction period. He shall decide questions which may arise as to quality and acceptability of materials furnished and WORK performed. He shall interpret the intent of the CONTRACT DOCUMENTS in a fair and unbiased manner. The

ENGINEER will make visits to the site and determine if the WORK is proceeding in accordance with the CONTRACT DOCUMENTS.

27.2 The CONTRACTOR will be held strictly to the intent of the CONTRACT DOCUMENTS in regard to the quality of materials, workmanship and execution of the WORK. Inspections may be made at the factory or fabrication plant of the source of material supply.

27.3 The ENGINEER will not be responsible for the construction means, controls, techniques, sequences, procedures, or construction safety.

27.4 The ENGINEER shall promptly make decisions relative to interpretation of the CONTRACT DOCUMENTS.

28. *LAND AND RIGHTS-OF-WAY*

28.1 Prior to issuance of NOTICE TO PROCEED, the OWNER shall obtain all land and rights-of-way necessary for carrying out and for the completion of the WORK to be performed pursuant to the CONTRACT DOCUMENTS, unless otherwise mutually agreed.

28.2 The OWNER shall provide to the CONTRACTOR information which delineates and describes the lands owned and rights-of-way acquired.

28.3 The CONTRACTOR shall provide at his own expense and without liability to the OWNER any additional land and access thereto that the CONTRACTOR may desire for temporary construction facilities, or for storage of materials.

29. *GUARANTY*

29.1 The CONTRACTOR shall guarantee all materials and equipment furnished and WORK performed for a period of one (1) year from the date of SUBSTANTIAL COMPLETION. The CONTRACTOR warrants and guarantees for a period of one (1) year from the date of SUBSTANTIAL COMPLETION of the system that the completed system is free from all defects due to faulty materials or workmanship and the CONTRACTOR shall promptly make such corrections as may be necessary by reason of such defects including the repairs of any damage to other parts of the system resulting from such defects. The OWNER will give notice of observed defects with reasonable promptness. In the event that the CONTRACTOR should fail to make such repairs, adjustments, or other WORK that may be made necessary by such defects, the OWNER may do so and charge the CONTRACTOR the cost thereby incurred. The Performance BOND shall remain in full force and effect through the guarantee period.

30. *ARBITRATION*

30.1 All claims, disputes and other matters in question arising out of, or relating to, the CONTRACT DOCUMENTS or the breach thereof, except for claims which have been waived by the making and acceptance of final payment as provided by Section 20, shall be decided by arbitration in accordance with the Construction Industry Arbitration Rules of the American Arbitration Association. This agreement to arbitrate shall be specifically enforceable under the prevailing arbitration law. The award rendered by the arbitrators shall be final, and judgment may be entered upon it in any court having jurisdiction thereof.

30.2 Notice of the demand for arbitration shall be filed in writing with the other party to the CONTRACT DOCUMENTS and with the American Arbitration Association, and a copy shall be filed with the ENGINEER. Demand for arbitration shall in no event be made on any claim, dispute or other matter in question which would be barred by the applicable statute of limitations.

30.3 The CONTRACTOR will carry on the WORK and maintain the progress schedule during any arbitration proceedings, unless otherwise mutually agreed in writing.

31. *TAXES*

31.1 The CONTRACTOR will pay all sales, consumer, use and other similar taxes required by the law of the place where the WORK is performed.

SUPPLEMENTAL GENERAL CONDITIONS

(1) All changes which affect the cost of the construction of the project must be authorized by means of a contract change order. The contract change order will include extra work, work for which quantities have been altered from those shown in the bidding schedule, as well as decreases or increases in the quantities of installed units which are different than those shown in the bidding schedule because of final measurements. All changes should be recorded on a contract change order as they occur so that they may be included in the partial payment estimate.

(2) Protection of Lives and Property.

(a) In order to protect the lives and health of his employees under the contract, the Contractor shall comply with all pertinent provisions of the "Manual of Accident Prevention in Construction" issued by the Associated General Contractors of America, Inc., and shall maintain an accurate record of all cases of death, occupational disease, and injury requiring medical attention or causing loss of time from work, arising out of and in the course of employment or work under the contract.

(3) The Contractor alone shall be responsible for the safety, efficiency, and adequacy of his plant, appliances, and methods, and for any damage which may result from their failure or their improper construction, maintenance or operation.

(4) No official of the Owner who is authorized in such capacity and on behalf of the Owner to negotiate, make, accept or approve, or to take part in negotiating, making, accepting, or approving any architectural, engineering, inspecting, construction or material supply contract or any subcontract in connection with the construction of the project, shall become directly or indirectly interested personally in this contract or in any part thereof. No officer, employee, architect, attorney, engineer or inspector of or for the Owner who is authorized in such capacity and on behalf of the Owner who is in any legislative, executive, supervisory, or other similar functions in connection with the construction of the project, shall become directly or indirectly interested personally in this contract or in any part thereof, any material supply contract, subcontract, insurance contract, or any other contract pertaining to the project.

(5) The Engineer may withold or, on account of subsequently discovered evidence, nullify the whole or part of any approved partial payment estimate to such extent as may be necessary to protect the Owner from loss on account of:

(a) Defective work not remedied.

(b) Claims filed or reasonable evidence indicating probable filing of claims.

(c) Failure of Contractor to make payments properly to Subcontractors or for material or labor.

(d) A reasonable doubt that the work can be completed for the balance then unpaid.

(e) Damage to another Contractor.

(f) Performance of work in violation of the terms of the contract documents.

(6) Where work on unit price items are substantially complete but lack clean-up and/or corrections ordered by the Engineer, amounts shall be deducted from unit prices in partial payment estimates to amply cover such clean-up and corrections.

(7) When the above grounds in (a) and (c) are cured, payment shall be made for amounts withheld because of them.

(8) Federal Requirements. Any specific requirements in the Contract Documents for approval by any federal agency or for compliance with any federal standards shall be disregarded.

(9) Retention. The retention shall be ten percent (10%) and shall not be subject to reduction.

(10) Project Representatives.

(a) Two RESIDENT PROJECT REPRESENTATIVES as provided in the GENERAL CONDITIONS shall be assigned to the PROJECT. One such representative shall be designated by Arizona Water Company, the water utility that will become owner of the water works and system upon completion, and shall be known as the UTILITY'S PROJECT REPRESENTATIVE, and the other such representative shall be the ENGINEER. Each RESIDENT PROJECT REPRESENTATIVE shall, for all purposes of the CONTRACT DOCUMENTS, be an authorized representative or agent of the OWNER.

(b) The two RESIDENT PROJECT REPRESENTATIVES shall each have the same rights as the CONTRACT DOCUMENTS provide that the ENGINEER has with respect to the following subjects:

(i) Review SHOP DRAWINGS and sample submissions.

(ii) Access to the WORK and to approved SHOP DRAWINGS and samples.

(iii) Timely notice of readiness for inspection, testing or approval of any WORK required specifically to be inspected, tested or approved by someone other than the CONTRACTOR, and copies of required certificates of inspection, testing or approval.

(iv) Proper facilities for observation of the WORK and for inspection and testing.

(c) Concurrence of the two RESIDENT PROJECT REPRESENTATIVES is necessary to the approval of SHOP DRAWINGS and sample submissions and of the substitution of materials, articles or pieces of equipment recommended by the CONTRACTOR as of equal substance or function to those referred to in the CONTRACT DOCUMENTS.

(d) Concurrence of the two RESIDENT PROJECT REPRESENTATIVES is necessary to issuance of FIELD ORDERS and CHANGE ORDERS.

(e) The UTILITY'S PROJECT REPRESENTATIVE shall call to the attention of the ENGINEER any WORK which should be rejected for failure to comply with the CONTRACT DOCUMENTS and any covered WORK which should be inspected or tested, and may request that the OWNER suspend the WORK.

(11) Change Orders.

In addition to concurrence of the two RESIDENT PROJECT REPRESENTATIVES, the approvals of the President or Executive Vice President of the water utility and of the Superintendent of Streets of the OWNER,with the consent of the OWNER'S Board of Directors,are necessary to issuance of CHANGE ORDERS.

(12) Acceptance.

(a) After SUBSTANTIAL COMPLETION, written concurrence of the two RESIDENT PROJECT REPRESENTATIVES, the President or Executive Vice President of the water utility and the Superintendent of Streets of the OWNER, that the work has been completed and is ready for acceptance is a prerequisite to the institution of acceptance proceedings.

(b) Upon such concurrence, the Superintendent of Streets shall so certify to the board of directors of OWNER, and acceptance proceedings shall thereupon be undertaken by OWNER pursuant to § 11-761.01.D., Arizona Revised Statutes.

(c) Final payment shall not be made to the CONTRACTOR until the proceedings have been completed and the WORK has been accepted thereunder as complete.

(13) Wage Scale.

The rate of wages for all laborers and mechanics employed by the CONTRACTOR or any SUBCONTRACTOR in the performance of the contract shall be not less than the prevailing rate of wages for work of a similar nature as provided by Article 2, Chapter 3, Title 34, Arizona Revised Statutes (§ 34-321, et seq.). In the event of a dispute as to what constitutes the prevailing rate of wages for work of a similar nature applicable to the contract, the matter shall be referred to the Industrial Commission of Arizona for determination, and its decision shall be conclusive.

The CONTRACTOR shall forfeit as a penalty to the OWNER $5.00 for each laborer, workman or mechanic employed, for each calendar day or portion thereof that the laborer, workman, or mechanic is paid less than the designated rates for any work performed under the contract by the CONTRACTOR or a SUBCONTRACTOR, as required by § 34-326, Arizona Revised Statutes.

The board of directors has ascertained the general prevailing rate of per diem wages from the Industrial Commission for each craft or type of workman needed to perform the contract, and reference is hereby made to same in Exhibit "A" attached hereto and incorporated by this reference herein.

(14) Precedence.

SUPPLEMENTAL GENERAL CONDITIONS shall prevail over GENERAL CONDITIONS and SPECIFICATIONS shall prevail over DRAWINGS in the event of and to the extent of any conflict, unless otherwise provided.

EXHIBIT "C"

ARIZONA WATER COMPANY

CONSTRUCTION SPECIFICATIONS

1. SCOPE OF WORK

All work is to be completed in a safe workmanlike manner and in accordance with these specifications.

Installations must conform with all local, state and federal regulations.

Any deviation from these specifications must be approved in writing by the Chief Engineer.

2. RIGHT-OF-WAY

Before any construction may commence, documented proof of right-of-way must be obtained.

3. LOCATION MARKING

The location of the construction line is to be staked in such a manner to allow the installation to be made in accordance with the job plans.

4. NOTIFICATION OF CUSTOMERS

Construction is to be scheduled to allow for a minimum "down time" for the existing system. When it is necessary to "shut down" the system, all affected customers are to be notified in advance.

5. CONSTRUCTION MARKING

Each job is to be marked and/or barricaded in such a manner that the construction is clearly visible at any time.

6. EXCAVATING TRENCH

The trench location is to be determined by the construction drawing(s). Dimensions of the trench are to be determined by the specification drawing "Typical Cement Asbestos Water Main."

Curves in the trench may be made without fittings if the deflection of the pipe does not exceed 5° or 13.6" per 13-foot length of pipe (4"-12" sizes only). Maximum deflection for pipe in excess of 12" diameter will be specified by the Chief Engineer.

7. MATERIALS

All pipe, valves, fittings, and appurtenances are to be specified by the Chief Engineer.

8. MATERIALS TO BE PROVIDED

When any job is to be contracted the following materials will be provided by the Arizona Water Company:

(a) All cement-asbestos pipe complete with couplings, rubber rings, and installation lubricant.

(b) All other pipe which may be used as a permanent part of the system as a conduit for water.

(c) All cast-iron or other fittings; all permanent plugs and caps; all valves, including material for valve boxes; all fire hydrants and all rubber rings and caulking materials used for the installation of fittings and valves.

(d) All couplings used to make lateral connections with existing mains, as shown on plans and specifications.

(e) Chlorinating agent.

(f) Water for leakage, pressure testing, and sterilization.

The contractor is to furnish all material and concrete for thrust blocks, other anchors, and reinforcing steel; also, all gravel, crushed stone, earth, sand which may be required. The contractor will also supply all material for bracing, shoring and sheathing of trenches; for construction of required forms, barricades, or temporary crossings and all material for paving replacements.

It is the intent of these specifications that Arizona Water Company will supply all of the necessary materials which will become a permanent and integral part of the water distribution system with the exception of concrete blocking, anchors, backfill material, and supplies used during prosecution of work.

9. INSTALLATION OF PIPE

All pipe is to be installed in accordance with the recommendations of the manufacturer unless otherwise directed by these specifications or the Chief Engineer.

All pipe, fittings, and valves shall be laid true to the lines and grades established by these specifications and plans or otherwise directed by the Company.

The ends of the pipe shall be thoroughly cleaned and inspected for damage which will affect the water-tightness of the joints.

Whenever the work ceases for any reason, all open ends shall be plugged with tight-fitting temporary plugs or covers, furnished by the Contractor.

Concrete thrust blocks of the sizes required by these plans and specifications are to be provided at all changes in direction or size or at any other point where an unbalanced thrust due to water pressure would exist.

Ring-tite valves shall be installed where shown on the plans or otherwise directed by the Company. Concrete anchor blocks are to be provided on all valves, and all valves are to be provided with valve boxes, all as shown on the plans.

Installation of pipe shall be made in a manner which will allow the pipe to lay evenly supported in the trench. The couplings must not support the pipe. In rock conditions, the trench must be excavated 6" deeper than pipe grade and then brought back up with select damp material thoroughly tamped to pipe grade.

The trench bottom must be straight and free from voids at the correct grade.

Deflection of pipe is not to exceed the limitations set forth in Item 6 - "Excavating Trench."

10. BACKFILL OF WATER MAINS

Prior to pressure and leakage tests, selected backfill material approved by the Company -- not frozen, and free from rock, large stones, boulders or other unsuitable substances -- shall be deposited in the trench uniformly on both sides of the pipe for the full width of the trench and to the horizontal diameter of the full length of the pipe, except at joints, which shall be left clear. This backfill material shall be tamped in 4-inch layers and shall be sufficiently damp to permit thorough compaction under and on each side of the pipe to provide support free from voids. Additional selected backfill material shall then be deposited between pipe joints to an average depth of 24-inches over the top of the pipe. The pipe joints shall remain exposed until completion of the pressure and leakage tests unless otherwise authorized by the Company.

On completion of pressure and leakage tests, the exposed joints shall be backfilled with selected backfill to a depth of 24-inches above the top of the pipe and joint. The balance of backfill shall contain no rock, stones, or boulders larger than 8-inches in its greatest dimension and shall be free from brush or any other perishable or objectionable matter that would prevent proper consolidation or that might cause subsequent settlement and shall be compacted thoroughly to a density equal to that of adjacent original material.

WATER-SETTLING WILL NOT BE PERMITTED WITHOUT THE APPROVAL OF THE COMPANY.

Where settlement occurs in areas which have been backfilled additional material must be refilled and compacted as required.

All excess material, trash, wood frames, and debris is to be removed from the job site and disposed.

11. TESTING

(A) Hydrostatic Tests for Water Mains

The contractor shall provide all necessary equipment and shall perform all work required in connection with the tests. All tests shall be conducted in the presence of the Company's representative. The Contractor shall notify the Company as soon as each line is ready for testing in order that the tests may be scheduled at a time convenient to both parties. The

Company will notify the Contractor promptly of the results of such tests. Should any line not satisfactorily meet the test requirements as set forth in these specifications, the Company will direct the Contractor to perfect his work as may be required under the circumstances.

Each section tested shall be slowly filled with water, care being taken to expel all air from the pipes. If necessary, the pipes shall be tapped at high points to vent the air.

A pressure of 150 PSI, as measured at the point of lowest elevation, shall be applied for not less than one hour and all pipe, fittings, valves, hydrants, and joints shall be carefully examined for defects. Leaking lead joints shall be recaulked and made tight. Other types of leaky jointing shall be made water tight.

(B) Leakage Test for Water Mains

All lines shall be filled with water and allowed to stand at least 24-hours prior to making a test for leakage. A pressure of 150 PSI shall be applied for a minimum of one hour in making leakage tests. The required pressure shall be maintained all during the test and in all cases the pressure at the beginning of the test and at the end of the test shall be the same. Other types of leaky jointing shall be made water tight.

12. STERILIZATION OF COMPLETED WATER MAINS

Before being placed in service, the entire water line shall be chlorinated. Chlorine may be applied by the following methods; liquid chlorine gas-water mixture, direct chlorine gas feed, or calcium hypochlorite and water mixture. The chlorinating agent shall be applied at the beginning of the section adjacent to the feeder connection and shall be injected through a corporation stop, hydrant, or other connection insuring treatment of the entire line.

Water shall be fed slowly into the new line with chlorine applied in amounts to produce a dosage of 40 to 50 PPM. Mains previously filled shall be treated to a concentrated dosage at intervals along with line and retained for a period of 24-hours or more. A residual of not less than 10 PPM shall be produced in all parts of the line. During the chlorination process all valves and accessories shall be operated. After chlorination, the water shall be flushed from the lines at its extremities until the replacement water tests are equal chemically and bacteriologically to those of the permanent source of supply.

Chlorine gas-water mixture shall be applied by means of solution-feed chlorinating device. Chlorine gas shall be fed directly from a chlorine cylinder equipped with suitable device for regulating the rate of flow and the effective diffusion of gas within the pipe. Calcium hypochlorite shall be comparable to commercial products known as "H.T.H.," "Perchloren," and "Maxochlor." A solution consisting of 5% of powder to 95% of water by weight should be prepared. The calcium hypochlorite and water mixture, first made into a paste and then thinned to a slurry, shall be injected or pumped into the newly laid line under the conditions specified hereinbefore.

All work shall be performed to the satisfaction of the Company. Dosage and retention time may be varied at the direction of the Company.

13. REPLACING PAVEMENT

Where it becomes necessary to remove existing pavement, the pavement shall be replaced in accordance with the specifications for the original work, or as otherwise required by local, County, or State specifications. The Contractor will pay all costs of labor and material to remove and replace pavement.

14. USE OF JOINT TRENCH

The water line is to be installed in a separate trench and no other utilities, i.e. gas, electric, telephone, or t.v. cable, are to be installed in the water line trench.

It is preferable, where water mains are installed in dedicated streets or easements 5-feet from property line, that the other utilities be installed on the opposite side of this right-of-way. In no case shall any other utility be installed closer than 5-feet to the water main.

15. INDEX TO SPECIFICATION DRAWINGS

Unless otherwise directed, the installations are to be constructed as indicated on the attached drawings:

Drawing No.	Item
S-1	Typical C.A. Water Main
S-2A & S-2B & S-2C	Typical Gate Valve
S-3	Typical Crosses
S-4	Typical Tees
S-5	Typical Ells
S-6	Typical Plugs and Reducers
S-7	Typical Laterals
S-8 & S-8A & S-8B	Typical Fire Hydrant - R.T.
S-9	Typical Fire Hydrant - Tapping
S-9A	Typical Fire Hydrant - Pinewood
S-10	2" Blow-off Device
S-11 & 11A	3/4" and 1" Service Connections
S-12 & 12B	1-1/2" and 2" Service Connections
S-13	4" and Larger Service Connections
S-16 & S-16A	Vault Installation
S-17 & S-17A	Vinyl Wrapping
S-18	Detector Check Valve

JOHNNY L. BUTLER
123 East Mahoney
Winslow, Arizona 86047
Phone 289-2444

CHARLES A. PATTERSON
P. O. Box 414
Show Low, Arizona 85901
Phone 338-4312

NORMAN H. TURLEY
318 West Arizona
Holbrook, Arizona 86025
Phone 524-3814

BOARD OF SUPERVISORS

Navajo County

HOLBROOK, ARIZONA 86025

SHERWOOD J. RODGERS
County Administrator

CONNIE J. MAZON
Clerk

PROJECT: United Estates
Subdivision Road Maintenance

August 23, 1979

RESOLUTION 79-46

WHEREAS, the road construction within United Estates Subdivision is reported to be in acceptable condition by the county engineer; and

WHEREAS, the developer has completed said construction in conformance with approved plans and variance granted by the Board of Supervisors; now therefore be it

RESOLVED, that the Board does hereby accept the roads within United Estates subdivision into the maintained road system in accordance with Arizona Revised Statutes Section 28-207 and budgetary allowances.

Norman H. Turley
Norman H. Turley, Chairman
Navajo County Board of Supervisors

Attest Dolores Salazar, Acting Clerk
Clerk of the Board

Copy

SW¼ 22, 18N, 19E
PE 9-731
RS

UTILITY EASEMENT

In consideration of One Dollar ($1.00), the receipt of which is hereby acknowledged, COUNTY OF NAVAJO, a body politic, (hereinafter called "Grantor") does hereby grant and convey to ARIZONA PUBLIC SERVICE COMPANY (hereinafter called "Company"), its successors and assigns, an easement four feet in width, to construct, operate and maintain electric lines and appurtenant facilities upon, across, over, and under the surface of the premises hereinafter described.

The premises through and across which this easement is granted are situated in Navajo County, Arizona, and are described as follows:

Commencing at a point on the North boundary of the Atcheson, Topeka and SantaFe right-of-way 113 rods East of the West boundary of Section 22, Township 18 North, Range 19 East, G&SRB&M, Navajo County, Arizona, thence North 400 feet, thence Northwest parallel to the A.T. & S.F. right-of-way for 400 feet, thence South for 360 feet; thence Northwest parallel to the A.T. & S.F. right-of-way to a point 10 rods East of the West boundary of Section 22, thence South 40 feet to the North boundary of the AT & S.F. right-of-way, thence Southeast along the A.T. & S.F. right-of-wayto the Point of Beginning, containing approximately 5½ acres.

This easement is to be the Southerly 4.0 feet of the Easterly 270.0 feet.

Together with the right to operate, repair, replace, maintain, and remove said lines and appurtenant facilities from said premises; to add to or alter said lines and/or facilities at any reasonable time, and to trim or remove any trees or shrubs that in the judgment of the Company may interfere with the construction or endanger the operation of said lines and/or facilities, with access to said easement and egress therefrom to permit normal operations of the Company in connection with said lines and/or facilities, and to permit the installation of the wires, fixtures, conduits, or cables of any other company within the boundaries of this easement.

Grantor shall not erect or construct or permit to be erected or constructed any building or other structure or drill any well within the limits of said easement; nor shall Grantor plant or permit to be planted any trees within the limits of said easement without the prior written consent of the Company; provided, however, Grantor shall have the right to construct and erect fences within the limits of said easement in a manner which will not unreasonably interfere with the Company's right of access to its lines and/or facilities.

By accepting this easement, the Company agrees to exercise reasonable care to avoid damage to said premises and all property that may at any time be thereon.

COUNTY OF NAVAJO

Dated: AUG 21, 1979

BY: Norman H. Turley

CHAIRMAN, NAVAJO COUNTY

Title BOARD OF SUPERVISORS

WITNESS:

Delores Salazar, Acting

STATE OF ARIZONA
County of Navajo } ss.

This instrument was acknowledged before me this 21st day of August, 1979,

by Norman H. Turley
(Name)

IN WITNESS WHEREOF I hereunto set my hand and official seal.

Connie J. Mazon
Notary Public

My Commission Expires:
Jan. 14, 1983

FORM 650-00E